ALUMASC RAINWATER®
GUTTERS AND DOWNPIPES

March 2023

Alumasc Rainwater Technical Brochure

Aluminium, Cast Iron & Steel Rainwater Systems

ALUMASC®
WATER MANAGEMENT SOLUTIONS

Contents

Introduction

90 Years of Rainwater Products 3
Technical & Customer Service Support 4
Interactive PDFs - Navigation Tips 5
Quality & Sustainability 6
Alumasc Manufacturing & Support Services 7
Benefits of Aluminium, Cast Iron & Steel 8
Alumasc Rainwater Systems - Product Gallery 10
Aluminium Rainwater Systems - Overview 12

The Traditional Aluminium Range

Aluminium Rainwater Systems - Overview of Finishes 14
Heritage Cast Aluminium - Product Summary 15
Heritage - Half Round Gutters & Fittings 16
Heritage - Beaded Half Round Gutters & Fittings 18
Heritage - Beaded Deep Run Gutters & Fittings 20
Heritage - Victorian Ogee Gutters & Fittings 21
Heritage - Moulded Gutters & Fittings 23
Heritage - Cast Aluminium Brackets 25
Heritage - Circular Downpipes & Fittings 27
Heritage - Square & Rectangular Downpipes & Fittings 31
Heritage - Hopper heads 34
Sundry Items 36

The Contemporary Aluminium Range

Aluminium Rainwater Systems - Product Selector 38
Aluminium Rainwater Systems - Overview of Finishes 39
Aqualine - Extruded Gutters - Product Summary 40
Aqualine - Half Round Gutters & Fittings 41
Aqualine - Deep Run Gutters & Fittings 43
Aqualine - Modern Gutters & Fittings 44
Aqualine - Moulded Gutters & Fittings 46
Aqualine - Box Gutters & Fittings 48
AX SnapFix - Extruded Gutter Systems - Summary 50
AX SnapFix - Beaded Half Round Gutters & Fittings 51
AX SnapFix - Beaded Deep Run Gutters & Fittings 53
AX SnapFix - Moulded Gutters & Fittings 55
AX - Moulded Gutters & Fittings 57
GX - Pressed Gutter Systems - Product Summary 59
GX - Joggle Gutters & Fittings 60
GX - Smooth Gutters & Fittings 62
GX - Moulded Gutters & Fittings 64
Flushjoint - Downpipe System - Product Summary 66
Flushjoint - Circular Pipes & Fittings 67
Flushjoint - Square & Rectangular Downpipes & Fittings 71
Swaged - Downpipe System - Product Summary 75
Swaged - Circular Downpipes & Fittings 76
Guardian - Security Pipe System - Product Summary 79
Guardian - Circular Pipes & Fittings 80
Guardian - Square & Rectangular Pipes & Fittings 82
Sundry Items 84

The Cast Iron Range

Apex Cast Iron Rainwater - Product Selector 86
Apex Cast Iron - Overview of Finishes 87
Apex Heritage Systems - Standard Product Range 88
Apex Heritage - Half Round Gutters & Fittings 89
Apex Heritage - Beaded Half Round Gutters & Fittings 91
Apex Heritage - Victorian Ogee Gutters & Fitting 93
Apex Heritage - Moulded Gutters & Fittings 95
Apex Heritage - Cast Iron Bracketry 97
Apex Heritage - Circular Pipes & Fittings 99
Apex Heritage - Square & Rectangular Pipes & Fittings 103
Sundry Items 110

The Cast Iron Made to Order Range

Apex Heritage - Made to Order 112
Apex Heritage - Made to Order Gutters 113
Apex Heritage - Made to Order Rainwater Heads 114
Apex Heritage - Made to Order Pipes & Holderbats 116

The Infinity Range

Steel Rainwater Systems - Product Selector 118
Infinity Steel System - Overview of Finishes 119
Infinity Steel System - Product Summary 120
Infinity Steel System - Gutters & Fittings 121
Infinity Steel System - Gutters, Pipes & Fittings 122
Copper & Quartz Zinc - Gutters, Pipes & Fittings 124

Design & Specification

Rainwater System Design 128
Drainage Calculator 129
Gutter Flow Rates 130
NBS Specification 132
General Specification Advice 133
Non-standard Items 134

Installation Guides

Aluminium Rainwater System Installation - Introduction 136
Installation - Cast Iron Range 155
Installation - Infinity Steel Range 160

90 years of rainwater products

Alumasc has a rich history of manufacturing in Burton Latimer, having opened c.1942 for the war effort. By 1947, production had switched from domestic aluminium goods to cast aluminium guttering and downpipes.

Goods produced today, under the 'Alumasc Rainwater' brand, are manufactured using the same trusted traditional processes.

> Our aim is to focus on high quality, environmentally responsible building products within the construction industry in order to deliver first-class customer service, technical support, long-term solutions and lasting relationships.

Services and Support

Alumasc leads the way in the manufacture of proven construction products and systems. This success is founded on four key areas:

Premium Products

A constantly evolving range of world-class water management solutions, fully accredited to UK, European and North American standards.

Technical Support

Comprehensive data for the specification and use of the entire product range is available online or in printed format. Specialist area managers lead our proactive support network on a project basis, using the latest CAD and calculation technology.

Approved Stockists

Delivery of Alumasc products is controlled through a network of approved suppliers.This allows close control over all logistical matters to ensure first-class customer service.

Warranties

All Alumasc products come with a company backed assurance as to their quality, life expectancy and suitability for purpose ensuring specifiers and end users long-term peace of mind.

The Alumasc Water Management Solutions Family

ALUMASC WATER MANAGEMENT SOLUTIONS

Alumasc (AWMS) is a UK-based supplier of premium building products. The majority of the group's business is in the area of sustainable building products which enable customers to manage energy and water use in the built environment.

They include: **Skyline** Architectural Aluminium; **Alumasc Rainwater** Gutters & Downpipes; **Harmer** Building Drainage; **Wade** Building Drainage and **Gatic Drainage & Engineered Access Covers.**

SKYLINE ARCHITECTURAL ALUMINIUM | ALUMASC RAINWATER GUTTERS AND DOWNPIPES | HARMER BUILDING DRAINAGE | WADE BUILDING DRAINAGE | GATIC DRAINAGE & ACCESS COVERS

Technical and Customer Service Support

Alumasc offers a full technical and support service as standard for all projects:

- Drainage calculations
- Take-offs from drawings
- BIM, CAD and NBS Specifications
- Detailed technical advice and quotes
- Site surveys
- Detailing advice
- Samples on request

Specialist knowledge across the water management cycle

Recommended installers

Alumasc Rainwater has a network of recommended installers covering the UK & Ireland. Visit the Alumasc WMS website to view.

Approved Stockists / Suppliers

Our products are delivered by approved suppliers throughout the UK & Ireland. To find your nearest stockist, visit the 'Where to buy' section on our website.

Click here to arrange CPD

Click here to arrange BIM

Click here to arrange samples

Click here to arrange take offs from drawings

Orders: Supplied in accordance with our current Terms & Conditions of Sale, which are downloadable on the website.

Carriage Charges: Any appropriate surcharges, including next-day, time-specific, and special vehicles (small, rigid, hiab, etc.) will be applied to all deliveries in accordance with our published schedule of carriage charges prevailing at date of despatch. Copies are available on request.

Disclaimer: Due to continuous product development, descriptions and illustrations may be subject to change without notice. All prices are subject to VAT at the current rate. While every effort will be made to maintain prices at the published levels, Alumasc Building Products (The Company) reserves the right to amend those prices without notice should the need arise.

Contact us:

For Project Quotations, Customer Service, Technical & Sales Orders call:

Alumasc Rainwater, Harmer Drainage & Skyline:

+44 (0)1536 383 810

Email: **info@alumascwms.co.uk** Website: **www.alumascwms.co.uk**

Interactive PDFs - Navigation Tips

Navigation button - Click (on PC) or tap (on iPad) to return to contents page

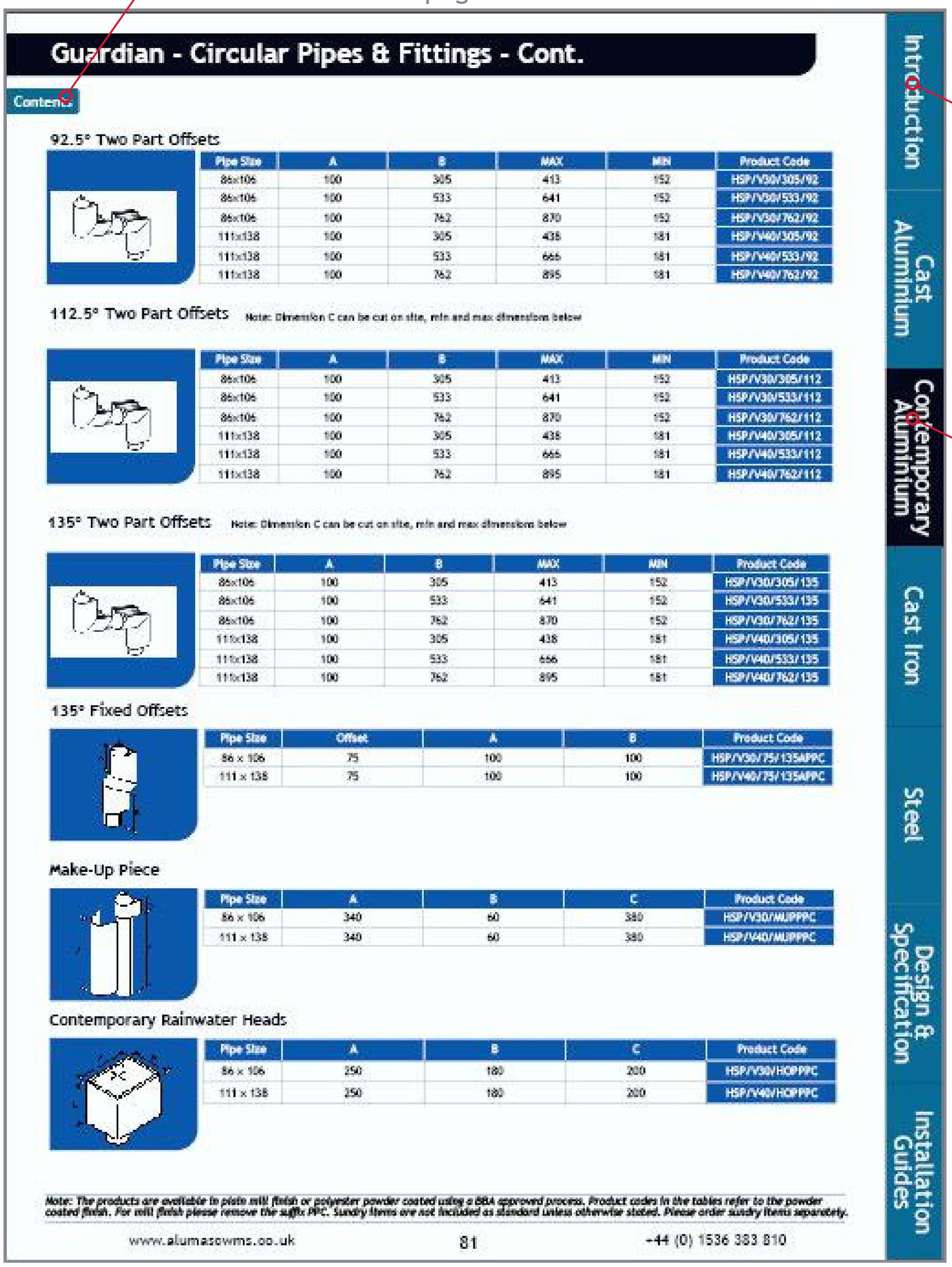

Guardian - Circular Pipes & Fittings - Cont.

Contents

92.5° Two Part Offsets

Pipe Size	A	B	MAX	MIN	Product Code
86x106	100	305	413	152	HSP/V30/305/92
86x106	100	533	641	152	HSP/V30/533/92
86x106	100	762	870	152	HSP/V30/762/92
111x138	100	305	438	181	HSP/V40/305/92
111x138	100	533	666	181	HSP/V40/533/92
111x138	100	762	895	181	HSP/V40/762/92

112.5° Two Part Offsets Note: Dimension C can be cut on site, min and max dimensions below

Pipe Size	A	B	MAX	MIN	Product Code
86x106	100	305	413	152	HSP/V30/305/112
86x106	100	533	641	152	HSP/V30/533/112
86x106	100	762	870	152	HSP/V30/762/112
111x138	100	305	438	181	HSP/V40/305/112
111x138	100	533	666	181	HSP/V40/533/112
111x138	100	762	895	181	HSP/V40/762/112

135° Two Part Offsets Note: Dimension C can be cut on site, min and max dimensions below

Pipe Size	A	B	MAX	MIN	Product Code
86x106	100	305	413	152	HSP/V30/305/135
86x106	100	533	641	152	HSP/V30/533/135
86x106	100	762	870	152	HSP/V30/762/135
111x138	100	305	438	181	HSP/V40/305/135
111x138	100	533	666	181	HSP/V40/533/135
111x138	100	762	895	181	HSP/V40/762/135

135° Fixed Offsets

Pipe Size	Offset	A	B	Product Code
86 x 106	75	100	100	HSP/V30/75/135AFPC
111 x 138	75	100	100	HSP/V40/75/135AFPC

Make-Up Piece

Pipe Size	A	B	C	Product Code
86 x 106	340	60	380	HSP/V30/MUPPPC
111 x 138	340	60	380	HSP/V40/MUPPPC

Contemporary Rainwater Heads

Pipe Size	A	B	C	Product Code
86 x 106	250	180	200	HSP/V30/HOPPPC
111 x 138	250	180	200	HSP/V40/HOPPPC

Note: The products are available in plain mill finish or polyester powder coated using a BBA approved process. Product codes in the tables refer to the powder coated finish. For mill finish please remove the suffix PPC. Sundry items are not included as standard unless otherwise stated. Please order sundry items separately.

www.alumascwms.co.uk 81 +44 (0) 1536 383 810

Navigation buttons - Click or tap the section you wish to visit

Navigation button - Dark blue is the section you are in

Recommended Viewing Settings

For optimum viewing please use Adobe Acrobat. This PDF contains clickable links and bookmarks that allow you to access the information faster. Some of these features will not work in other PDF readers.

Quality & Sustainability

In addition to complying with environmental legislation, Alumasc is committed to developing its own measures to limit the adverse effects of its activities on the environment. To this end, Alumasc operates an environmental policy that fully integrates all aspects of company activities.

Professional Bodies

Quality

ISO 9001: 2008

Alumasc operates a quality management system which is independently audited to ISO 9001: 2008. The ISO 9001 framework governs the management of many aspects of Alumasc support services, manufacturing and transport operations. Alumasc extends quality management to its network of approved installers for single source accountability and peace of mind.

Sustainability

Alumasc actively pursues sustainability in the full range of products it offers and, with its partners and its suppliers, is committed to putting consideration for the built and wider environment at the core of all aspects of current business and future development.

ISO 14001: 2004

Alumasc's manufacturing sites at St Helens, Merseyside and at Burton Latimer, Northamptonshire are audited to the ISO 14001:2004 Environmental Management Standard. Alumasc is committed to achieving improvements across all of its operating sites, not only as a good neighbour to the surroundings, but in the responsible sourcing of raw materials and monitoring of the impact on the environment as a whole.

BREEAM Standards

BREEAM points, as a framework for analysis and scoring, allow easy comparison of the relative merits of different construction types and also comparisons between different construction product groups. The BREEAM points system promotes the use of materials with a proven sustainable message and allows designers to differentiate between products with true ecological credentials and those not achieving the benchmark.

Indicative ratings for building materials given in the BRE Green Guide to Specification also allows designers to choose those products or construction methods that will be most beneficial in contributing to a high BREEAM points score.

Aluminium rainwater goods and fascia soffit systems are part of the range of high scoring Alumasc solutions. Promotion of these responsibly sourced materials brings clarity to the specification process thus achieving the desired effect of minimising the environmental impact of the construction process.

British Board of Agrément Certificate (BBA)

For 86/1671 Aluminium rainwater systems* and for the polyester powder coating process of our aluminium rainwater goods. *(GX & Heritage Half Round & Victorian Ogee gutter.)

Testing and Certification

Applicable Standards

BS EN 12056-3
Gravity drainage systems inside buildings, Part 3 - Roof drainage layout and calculation.

BS EN 8530 (Formerly BS 2997)
Specification for traditional-style half round, beaded half round, Victorian ogee and moulded aluminium rainwater systems.

BS EN 755
Aluminium and aluminium alloys – Extruded rod/bar, tube and profiles.

BS EN 1706:2010
Aluminium and aluminium alloys – Castings – Chemical composition and mechanical properties.

BS EN 1559
Founding – Technical conditions of delivery.

BS EN 1462:2004
Brackets for eaves gutters – Requirements and testing.

BS EN 12206-1:2004
Paints and varnishes – Coating of aluminium and aluminium alloys for architectural purposes.

BS 460:2002
Cast iron rainwater goods - Specification.

BS 437:2008
Specification for cast iron drainpipes, fittings and their joints for socketed and socketless systems.

British Board of Agrément
Certificate No. 86/1671
Alumasc Rainwater Systems.

RIBA Assessed CPD Seminar
Rainwater Disposal from Pitched Roofs.

BS EN 8579:2020
Guide to the design of balconies and terraces.

Alumasc Manufacturing & Support Services

Alumasc is one of the UK's leading manufacturers of aluminium and cast iron products for the construction industry. Our expertise in aluminium casting, extrusion and fabrication, and iron casting, stems from a proven track record accumulated over 90 years, enabling the provision of unrivalled technical support for designers, specifiers and contractors.

Manufacturing

Alumasc's UK casting and fabrication facilities employ both traditional and cutting edge production methods.
Alumasc aluminium rainwater goods are manufactured and independently assessed at the company's Burton Latimer site under the ISO 14001:2004 Environmental Management Standard. This not only ensures that upstream production processes have been monitored for their environmental impact, but that due consideration is taken for all aspects of packaging, transport and disposal, in order to deliver as sustainable a rainwater product as practicable.

Cast iron and steel rainwater goods are manufactured in dedicated factories abroad.

Performance

Alumasc rainwater solutions are designed to give optimum performance over their lifespan. In every aspect of material choice or detailing decision the aim is to produce premium, fit for purpose products and systems. This ethos has resulted in Alumasc being associated with innovative projects that have led the way in construction performance, stood the test of time and demonstrated good design.

Materials

Alumasc offer a variety of aluminium finishes to the specifier. Whether you are seeking to replicate a period cast iron or contemporary appearance, Alumasc has the solution. Traditional cast aluminium gutter profiles and complementary downpipes can be finished to replicate cast iron to special order – ideal for period refurbishment or where a traditional design is required.

Alumasc's contemporary aluminium rainwater ranges include dry joint extruded and wet joint folded gutter profiles, which can be used in combination with various downpipes to fulfil different functional requirements (e.g., high security) and for different visual effects to suit the building context. Products can be supplied in a plain mill finish or in Alumasc's Raincote range of polyester powder coated finishes.

Alumasc's sand cast iron rainwater range combines the best of traditional qualities with modern technology to suit today's construction needs. Innovations include pre-finishing and advanced jointing techniques. Comprehensive components from stock can also be complemented by a made-to-order service.

Alumasc's steel rainwater system offers a contemporary, eco-friendly and cost effective alternative to uPVC gutters and downpipes.

Support Services

Comprehensive information and advice on the specification and use of our rainwater products and systems is provided through our technical literature, website and the Alumasc Technical Services department. This is backed by proactive support on a project-by-project basis, led by specialist area managers.

Product Development

Alumasc routinely design, manufacture and patent new rainwater products for the UK and world markets.

Ongoing research and development ensures that our offer comprises high quality, world-class products and systems that are fully accredited to UK and European standards.

Development of existing sound products and practices is central to the success of Alumasc and key to the way in which we provide our proven solutions. Equally, the basis for any new and innovative development is grounded in the knowledge and experience Alumasc has of its core manufacturing materials.

Alumasc's commitment to ongoing development and the promotion of best practice is reflected in our CPD programme, which keeps the industry abreast of new standards and product solutions.

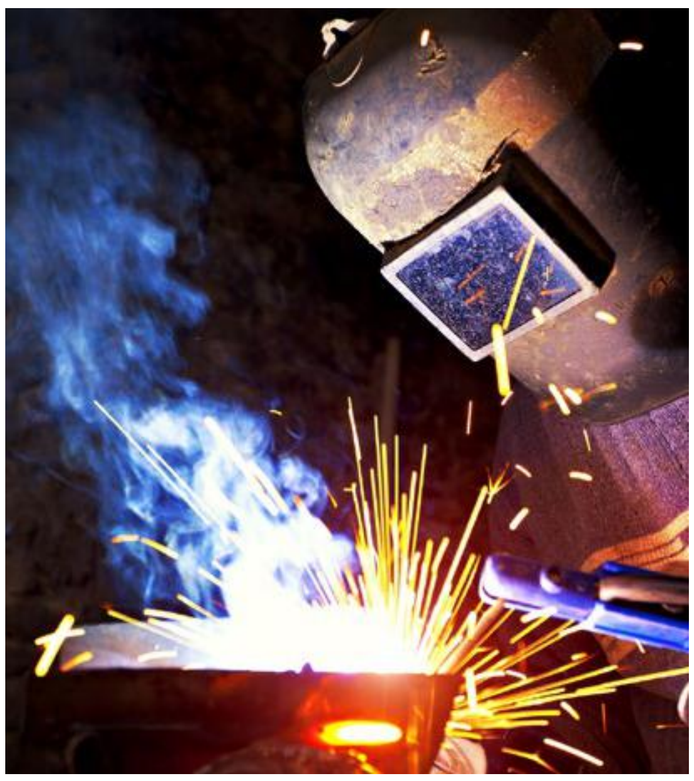

Benefits of Aluminium, Cast Iron & Steel

Aluminium is a metal with exceptional characteristics, both in respect of its functional performance and sustainable credentials. It has become increasingly important in the construction industry, being used in ever more innovative ways by designers and specifiers.

Aluminium

A 'Green Material'

To be deemed 'green', a material or product should be recyclable, sustainable and versatile. Aluminium has all of these properties and its production is strictly monitored for responsible sourcing of raw materials.

Aluminium has a light weight-to-strength ratio, which means it is strong yet economical. The reduced weight provides benefits in material transportation and application. Aluminium can also be formed in a variety of ways to accommodate off-site fabrication.

Durable and Strong

Aluminium is resistant to corrosion and does not rust. It is weatherproof and is unaffected by UV rays, ensuring optimal performance over its lifetime.

Mixed with small amounts of other metal to form an alloy, aluminium can provide the strength of steel at only one third of the weight.

Recyclable

Historically, aluminium has proven to be one of the most important materials in successful recycling programs. It offers a high scrap value, widespread consumer acceptance, and enjoys significant industry support.

Most aluminium products are made from 100% recycled scrap. The recycling process does not result in any loss of the material's basic qualities and properties.

Recycled aluminium offers significant energy benefits as remelting used aluminium requires only 5% of the energy needed to produce the primary metal. As aluminium can be recycled indefinitely, it need never be disposed of in landfill.

Versatile

Aluminium and its alloys can be easily formed and shaped by rolling, extrusion, forging and casting; characteristics that reflect the wide choice of form and visual appearance of aluminium in construction applications.

The Benefits at a Glance

- Corrosion resistant
- Lightweight
- Durable and strong
- Formable
- High strength to weight ratio
- Cryogenically strong
- Electrically conductive
- Non-combustible
- Non-magnetic
- Non-sparking
- Non-toxic
- Resilient
- Thermally conductive
- Fully recyclable

Cast iron, as a building material, has been around for much longer than aluminium, and advances in technology have ensured that today's products are fully attuned to modern construction needs.

Cast Iron

High Strength

The crystalline structure of cast iron gives the material high strength and robustness. Once installed, cast iron components resist impact damage even in exposed areas, such as shopping centres, car parks and schools.

Durability

Inherent corrosion resistance coupled with a primed and painted finish ensures that cast iron components will need minimal maintenance during the lifetime of the rainwater installation.

Recyclable

Made with almost 100% recycled scrap, cast iron can be recycled indefinitely, and therefore should not be disposed of in landfill.

The Benefits at a Glance

- Corrosion resistant when a protective coat is applied
- Durable and strong
- Impact resistant
- Non-combustible
- Non-toxic
- Fully recyclable

Benefits of Aluminium, Cast Iron & Steel

Steel is an ideal metal for use as a roof drainage system. It's lighter than cast iron and aluminium, making it easy to handle on site and offering a contemporary finish.

Steel

A 'Green Material'

Steel is a 'green' building material, which is recyclable and versatile in its use. It has a high strength to weight ratio which means it's strong yet economical and can be used to facilitate faster construction processes such as off-site fabrication. Steel is 98% recyclable, with recycled steel only requiring 40% of the energy needed to produce the primary metal..

Durable and Strong

Steel is extremely durable with excellent tensile strength which gives the system robustness throughout its life on the building. Unlike plastic systems, steel is unaffected by UV rays, preventing colour fade and any loss of integrity.

Life Expectancy

Galvanised steel has a long life expectancy in excess of 50 years in most rural environments and 20-25 years plus, in urban and costal environments. The longevity is further improved with the polyester powder coating option which is applied directly onto the galvanised finish.

Low Maintenance

Galvanised steel is highly durable and therefore needs little maintenance, requiring only an occasional washdown to remove any dirt and debris. The zinc coating is inherently resistant to environmental corrosion.

The Benefits at a Glance

- Corrosion resistant
- Lightweight
- Durable and strong
- Fully recyclable
- Cost-effective solution
- Minimum environmental impact

Alumasc Rainwater Systems - Project Gallery

Alumasc aluminium and cast iron rainwater systems offer specifiers functional and stylistically appropriate solutions to rainwater drainage across all styles of building from traditional to contemporary.

Alumasc has a long and successful track record in architectural rainwater design.

Broomfield Primary School, GX & Flushjoint

Lochend Flats, Flushjoint

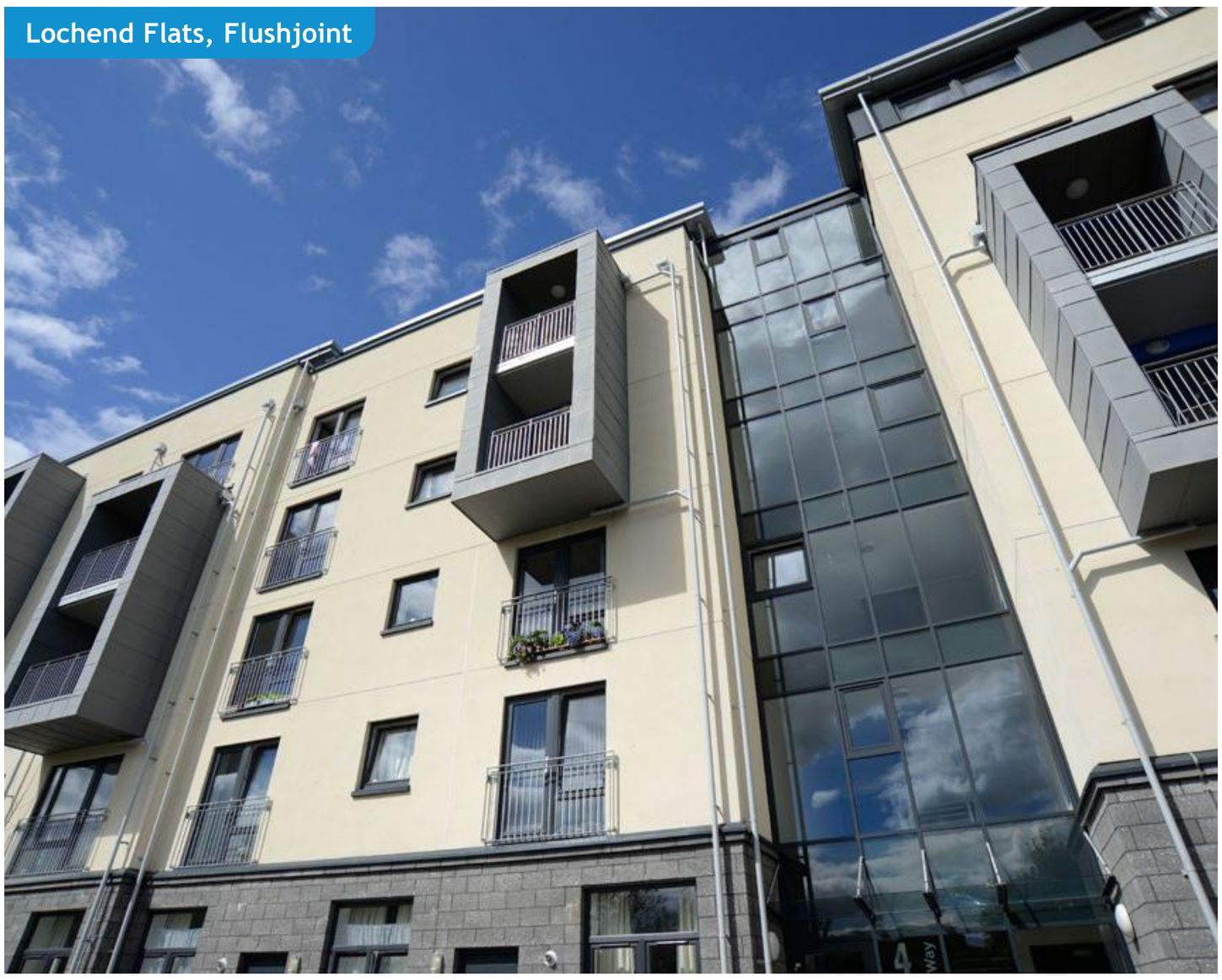

Celtic Court, Flushjoint

Marylebone Station, Heritage Cast Aluminium

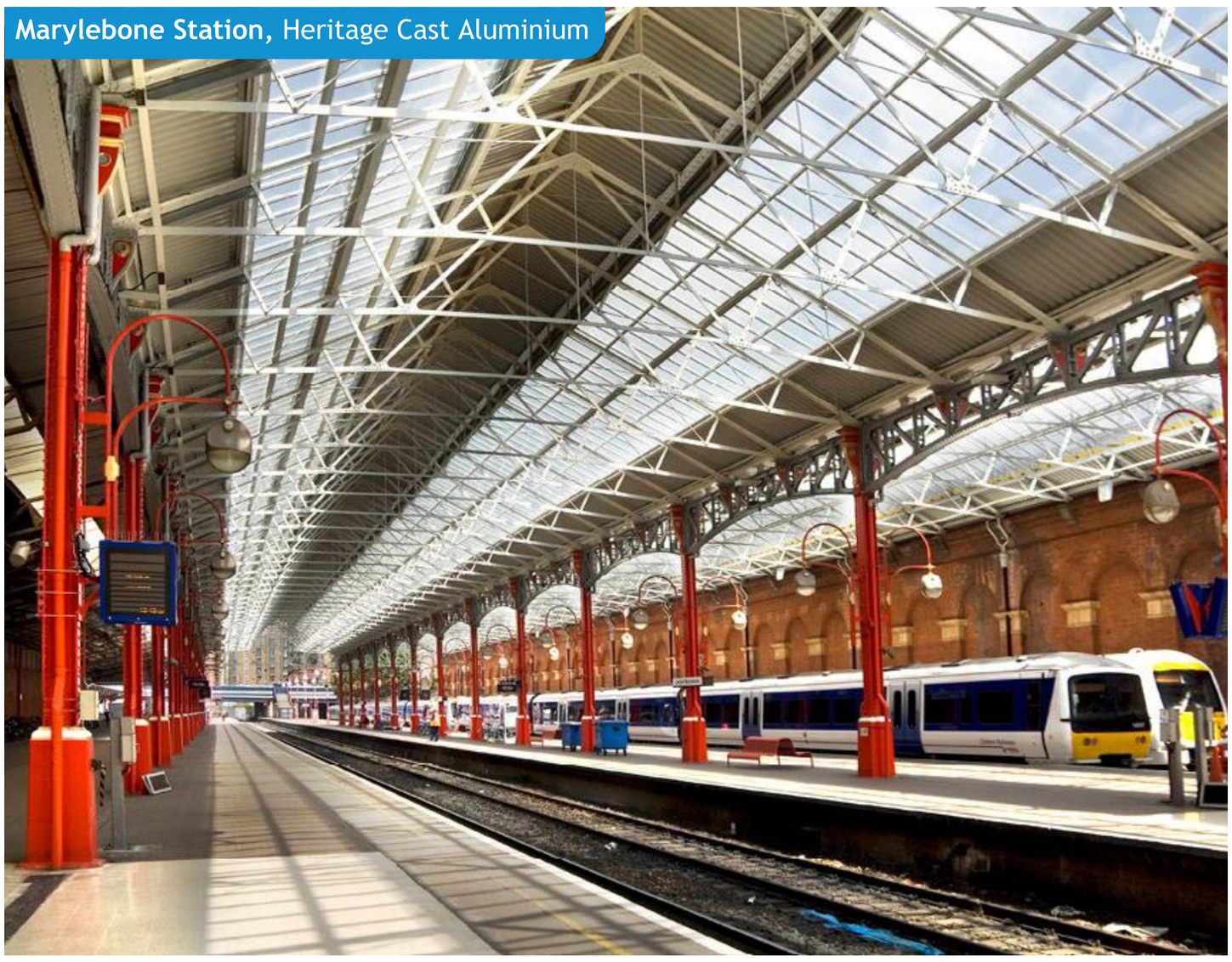

Alumasc Rainwater Systems - Project Gallery - Cont.

Conningbrook Lakes, Infinity Steel

The Lancasters, Apex Cast Iron

St Pancras, Apex Cast Iron

Bealieu, Skyline

Bovingdon High Street, Rainwater

Oundle House, Infinity Steel

Alumasc Aluminium Rainwater Systems - Overview

Cast Aluminium

Traditional jointing and fixing techniques ideal for period and restoration projects, in a simple-to-install lightweight system.

Contemporary Aluminium

Six different modern systems offering a range of features depending on the style and type of your project.

Cast Iron

Authentic sand castings combine traditional manufacture with modern quality control and standards, to create a high quality range of traditional cast iron gutters.

Steel

The new lightweight steel range offers a contemporary, eco-friendly and cost effective alternative to plastic gutters, without the risk of shrinking, leaking or colour fading.

Alumasc Rainwater Systems

The Traditional Aluminium Range

Heritage Cast Aluminium is a range of traditional profiles, fittings and accessories in cast aluminium. Designed to provide all the key architectural features appropriate to traditionally designed buildings either new build or refurbishment, in a lightweight fully finished product.

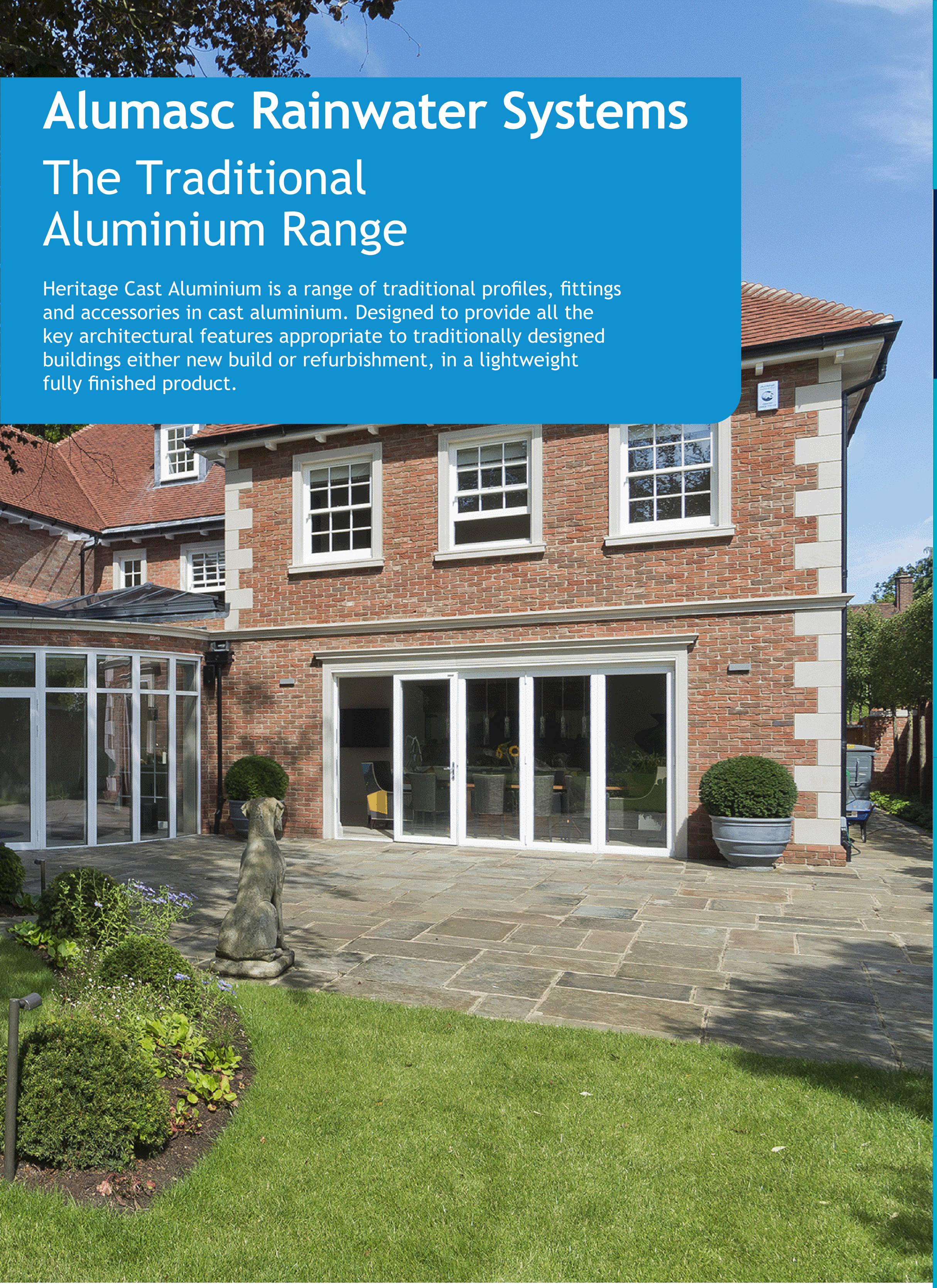

Aluminium Rainwater Systems - Overview of finishes

Alumasc Aluminium Rainwater Systems are available in plain mill finish or in the Raincote range of BBA approved polyester powder coatings. The standard aluminium RAL range offers a choice of 26 colours, all with a 30% gloss finish unless otherwise stated.

Traditional & Contemporary Aluminium Rainwater Systems: In-House Powder Coatings

Alumasc's in-house powder coating plant gives both the control and the freedom to produce a range of colour finishes to a level not typically available in the construction industry. Utilising the technologies and procedures adopted for its automotive precision castings division, Alumasc benefits from high specification coating techniques that fulfil the rigors of testing prescribed by some of the world's leading vehicle producers. Finishes of this quality maintain their appearance even when subject to harsh geographical weather conditions.

The aluminium undergoes a series of pretreatments to provide the ideal prepared surface to receive an electrostatically applied polyester powder in the chosen colour. This is then 'baked' and bonded to the fitting in a carefully controlled oven; the complete process is achieved on a continuous line to obtain the best results. The performance of polyester powder coated rainwater systems greatly exceeds that of site painted systems.

Approvals & Quality Control

Polyester powder coating is in accordance with BS EN 12206-1:2004. This refers to the coating of aluminium and aluminium alloys for architectural purposes. In the case of rainwater systems it is accepted that such coating is both decorative and protective. Alumasc systems will certainly be finished to this standard, and will in most cases exceed it.

Along with independent auditing to the ISO 9001:2008 Quality Management Standard, Alumasc maintains BBA certification for the powder coating of its aluminium rainwater goods in respect of longevity of performance and colour fastness - British Board of Agrément Certificate No. 86/1671.

Choice of Colour

The standard aluminium Raincote range comprises 26 colours with additional colours with a BS or RAL number available to special order, subject to quantity and cost.

The colours reproduced on this page are for general guidance only.

Please contact Alumasc marketing team for further information on colour choice and samples.

01536 383810

RAL 1011m Brown Beige	RAL 1013m Pearl White	RAL 1021m Cadmium Yellow	RAL 2002m Vermilion
RAL 3003m Ruby Red	RAL 3005m Wine Red	RAL 5003m Sapphire Blue	RAL 5010m Flower Blue
RAL 6005m Moss Green	RAL 6018m Yellow Green	RAL 7005m Mouse Grey	RAL 7006m Beige Grey
RAL 7012m * Basalt Grey	RAL 7015m * Slate Grey	RAL 7016m * Anthracite Grey	RAL 7024m Graphite Grey
RAL 7036m Platinum Grey	RAL 7037m * Dusty Grey	RAL 7038m Agate Grey	RAL 8017m Chocolate Brown
RAL 8019m Grey Brown	RAL 9006g Metallic Silver (80% Gloss)	RAL 9006m Metallic Silver	RAL 9016m * White
Textured Black	RAL 9017m Black (60% Gloss)		

Colours are reproduced for general guidance only. For exact colour and finish references, please contact Alumasc for colour swatch samples and for further information.

* Also available in a textured finish

BBA APPROVAL INSPECTION TESTING CERTIFICATION
CERTIFICATE No.86/1671

"We can match any BS or RAL colour of your choice"

Heritage Cast Aluminium - Product Summary

Heritage is a comprehensive range of traditional gutter profiles, round, square and rectangular pipes and all associated fittings and accessories. Designed to provide all the essential architectural features appropriate to traditionally designed buildings, the Heritage range is also fully in tune with modern fast track building contracts.

Heritage - Half Round Gutter

100mm (4”)
113mm (4.5”)
125mm (5”)
150mm (6”) HR6

Heritage - Beaded Half Round Gutter

113 (4.5)
125mm (5”)

Heritage - Beaded Deep Run Gutter

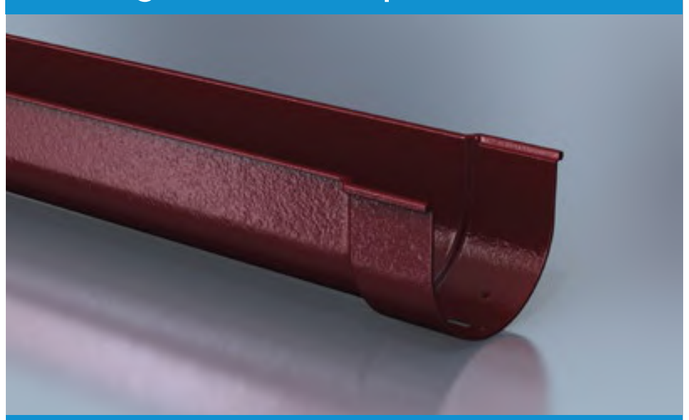

113 x 75mm (4.5 x 3”)

Heritage - Victorian Ogee Gutter

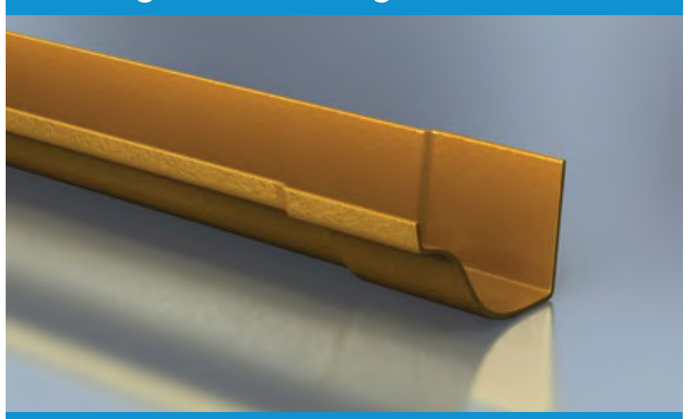

100mm (4”)
113mm (4.5”)
125mm (5”)

Heritage - Moulded Gutter

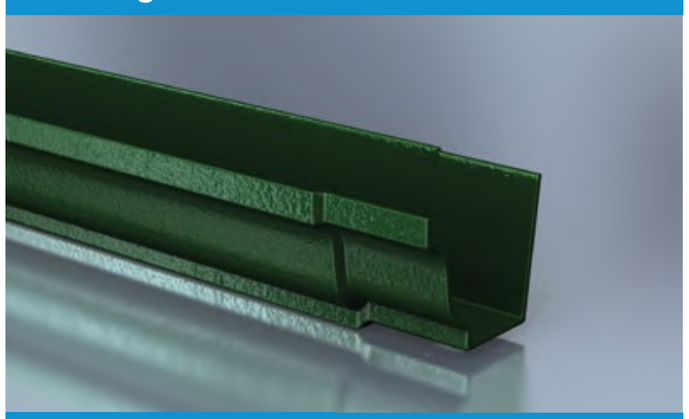

100 x 75mm (4 x 3”)
125 x 100mm (5 x 4”)
150 x 100mm (6 x 4”)

Heritage - Circular Pipe

63mm (2.5”)
75mm (3”)
100mm (4”)
150mm (6”)

Heritage - Square Pipe

75 x 75mm (3 x 3”)
100 x 100mm (4 x 4”)

Heritage - Rectangular Pipe

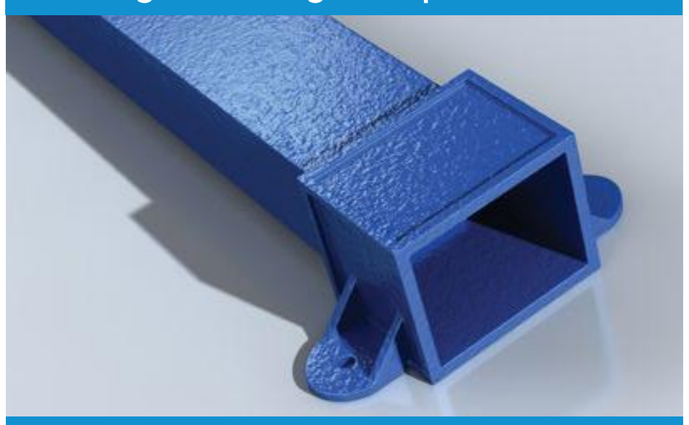

100 x 75mm (4 x 3”)

Applications

- Ideal for traditionally designed buildings, in both new build and refurbishment applications
- Can be used as a direct replacement of cast iron
- For both flush and projecting eaves applications
- Can use any combination of aluminium gutter and aluminium downpipe ranges

Features & Performance

- 5 gutter and 3 downpipe profiles available in a choice of sizes
- Pipes available in 1, 2 and 3 metre lengths
- Lightweight, durable and non-corrodible
- Life expectancy of aluminium: 40 years (rural/suburban areas); up to 25 years (industrial/marine areas when using a marine grade coating)
- Easy to handle and fix
- BBA approved process
- Aluminium is 100% recyclable

Manufacture

- UK manufactured by Alumasc
- Gutters and fixings made from LM6 marine grade aluminium alloy.

  Gutters are gravity diecast, fittings are pressure diecast and downpipes are extruded aluminium
- Manufactured in accordance with BS 8530 (formerly BS 2997)

Installation & Fixing

- Gutters are wet sealed with bolted joints, with a range of fixing options
- Gutter joints are secured with screws or bolts through integral holes/slots
- Victorian Ogee and Moulded gutters provided with slots in rear for direct fixing
- Brackets and fittings provided with fixing holes where appropriate
- Circular pipe jointing up to 100mm diameter is by separate sockets giving maximum flexibility for installation. 150mm circular pipes and all square and rectangular pipes have welded on sockets
- Simple fixing to wall by eared sockets or by a choice of pipe clips
- Minimal maintenance requirements

Heritage - Half Round Gutter and Fittings

Contents

Heritage Half Round cast aluminium gutters are available in 4 sizes and 2 gutter lengths, together with a complete range of fittings. A classic socketed system, which can be finished to replicate cast iron or polyester powder coated using the raincote range on a BBA approved process.

Notes:
All dimensions are in mm unless shown otherwise.
Gutter sizes shown are nominal.
Gutter Thickness (nominal +/- 1mm)

Gutters

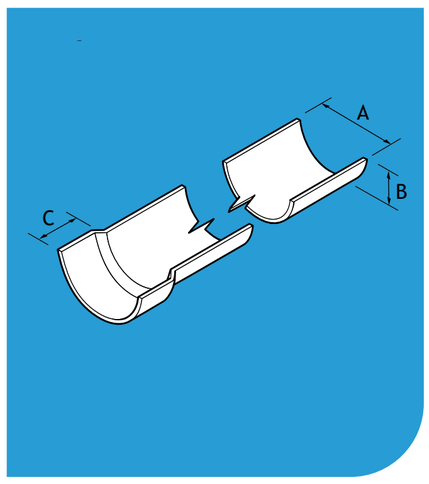

Gutter Size	Gutter Length	A	B	C	T	Weight (KG)	Product Code
100 (4”)	1830	108	47	47	4	3	HR1/1PPC
113 (4.5”)	1830	122	52	47	4	3	HR2/16PPC
125 (5”)	1830	134	56	47	4	3.26	HR3/132PPC
150 (6”)	1830	155	65	60	4	3.5	HR6/1830PPC
100 (4”)	610	108	47	47	4	0.9	HR1/153PPC
113 (4.5”)	610	122	52	47	4	1.4	HR2/154PPC
125 (5”)	610	134	56	47	4	1.4	HR3/155PPC

Union Clips

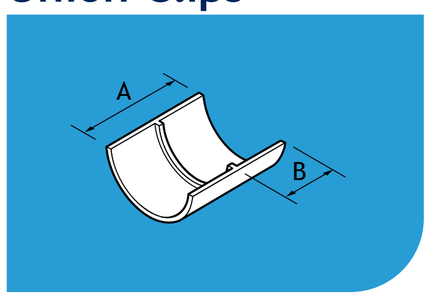

Gutter Size	A	B	Product Code
100 (4”)	96	46	HR1/11PPC
113 (4.5”)	96	46	HR2/26PPC
125 (5”)	96	46	HR3/148PPC
150 (6”)	96	46	HR6/UCPPC

Stop-Ends

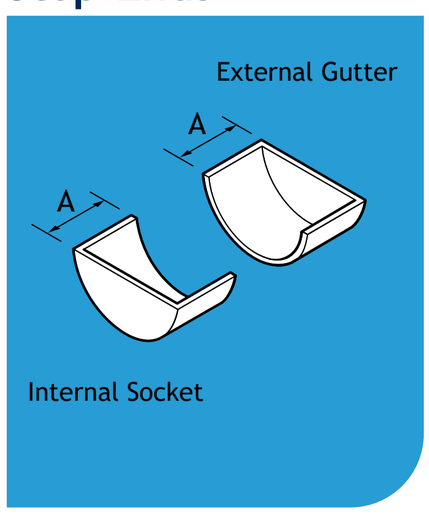

Gutter Size	Type	A	Product Code
100 (4”)	External	51	HR1/13PPC
113 (4.5”)	External	51	HR2/28PPC
125 (5”)	External	51	HR3/150PPC
150 (6”)	External	51	HR6/SE/EXTPPC
100 (4”)	Internal	45	HR1/12PPC
113 (4.5”)	Internal	45	HR2/27PPC
125 (5”)	Internal	45	HR3/149PPC
150 (6”)	Internal	45	HR6/SE/INTPPC

Fascia Brackets

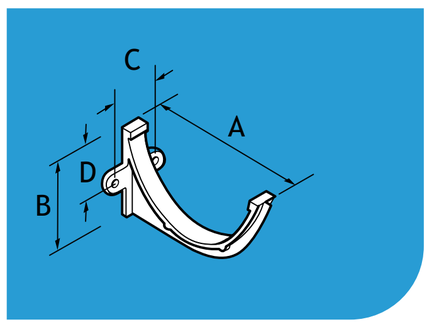

Gutter Size	A	B	C	D	Product Code
100 (4”)	127	65	38	35	HR1/14PPC
113 (4.5”)	140	70	38	40	HR2/29PPC
125 (5”)	155	85	38	45	HR3/151PPC
150 (6”)	180	81	45	52	HR6/FBPPC

Note: HR6FB Does not work with the Universal Drive-in Rise & Fall Bracket or the universal rafter arms.

Note: The products are available in plain mill finish or polyester powder coated using a BBA approved process. Product codes in the tables refer to the powder coated finish. For mill finish please remove the suffix PPC. Sundry items are not included as standard unless otherwise stated. Please order sundry items separately.

Heritage - Half Round Gutter and Fittings - Cont.

Stop End Outlet - with Socket

Note: designed to fit heritage socketed aluminium pipes. Add suffix /f to product code to fit flushjoint or guardian pipes

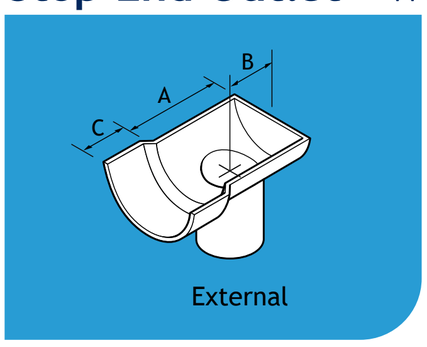

Gutter Size	Pipe Size	A	B	C	Product Code
100 (4”)	63 Dia	125	61	47	HR1/9PPC
113 (4.5”)	63 Dia	125	61	47	HR2/24PPC
125 (5”)	63 Dia	125	61	47	HR3/144PPC
125 (5”)	75 Dia	125	61	47	HR3/143PPC

Stop End Outlet - with Spigot

Note: designed to fit heritage socketed aluminium pipes. Add suffix /f to product code to fit flushjoint or guardian pipes

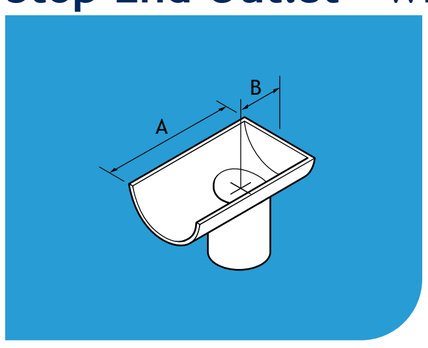

Gutter Size	Pipe Size	A	B	Product Code
100 (4”)	63 Dia	172	64	HR1/10PPC
113 (4.5”)	63 Dia	172	64	HR2/25PPC
125 (5”)	63 Dia	172	64	HR3/147PPC
125 (5”)	75 Dia	172	64	HR3/146PPC

Running Outlet - with Double Socket

Note: designed to fit heritage socketed aluminium pipes. Add suffix /f to product code to fit flushjoint or guardian pipes

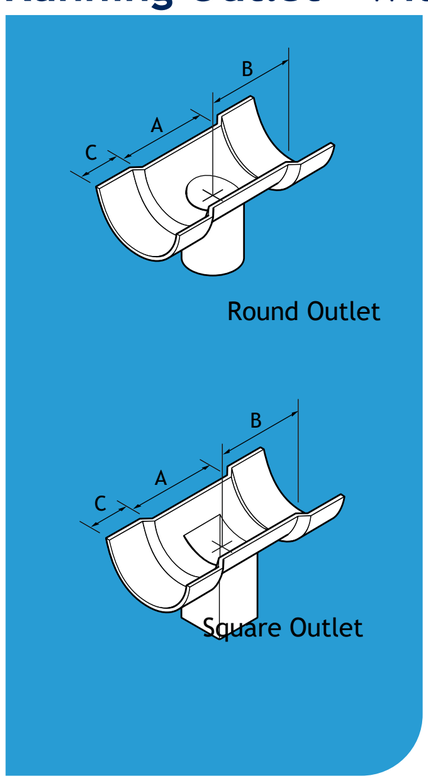

Gutter Size	Pipe Size	A	B	C	Product Code
100 (4”)	63 Dia	148	121	47	HR1/8PPC
113 (4.5”)	63 Dia	148	121	47	HR2/23PPC
125 (5”)	63 Dia	148	121	47	HR3/141PPC
150 (6”)	63 Dia	148	121	47	HR6/RO25PPC
100 (4”)	75 Dia	148	121	47	HR1/367PPC
113 (4.5”)	75 Dia	148	121	47	HR2/3/23PPC
125 (5”)	75 Dia	148	121	47	HR3/140PPC
150 (6”)	75 Dia	148	121	47	HR6/RO30PPC
125 (5”)	100 Dia	148	121	47	HR3/139PPC
150 (6”)	100 Dia	148	121	47	HR6/RO40PPC
100 (4”)	75 x 75 Dia	148	121	47	HR1/381PPC
113 (4.5”)	75 x 75 Dia	148	121	47	HR2/382PPC
125 (5”)	75 x 75 Dia	148	121	47	HR3/383PPC

90º Angles

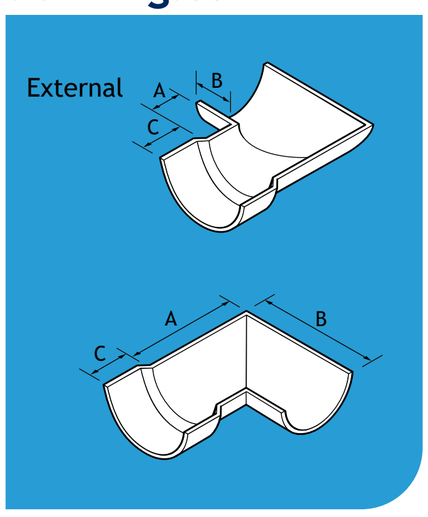

Gutter Size	Type	A	B	C	Product Code
100 (4”)	External	27	77	47	HR1/5PPC
113 (4.5”)	External	27	77	47	HR2/20PPC
125 (5”)	External	27	77	47	HR3/136PPC
150 (6”)	External	27	77	47	HR6/90EXTPPC
100 (4”)	Internal	132	183	47	HR1/4PPC
113 (4.5”)	Internal	146	197	47	HR2/19PPC
125 (5”)	Internal	157	210	47	HR3/135PPC
150 (6”)	Internal	165	217	47	HR6/90INTPPC

135º Angles

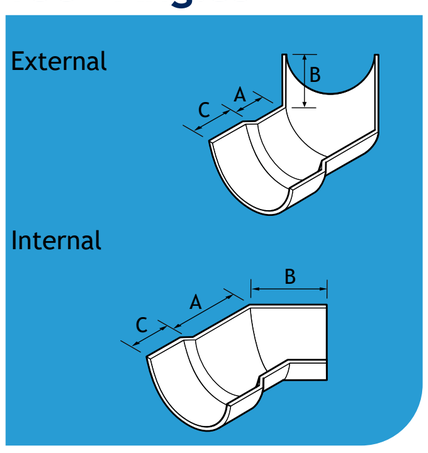

Gutter Size	Type	A	B	C	Product Code
100 (4”)	External	27	77	47	HR1/7PPC
113 (4.5”)	External	27	77	47	HR2/22PPC
125 (5”)	External	27	77	47	HR3/138PPC
100 (4”)	Internal	132	183	47	HR1/6PPC
113 (4.5”)	Internal	146	197	47	HR2/21PPC
125 (5”)	Internal	157	210	47	HR3/137PPC

Note: The products are available in plain mill finish or polyester powder coated using a BBA approved process. Product codes in the tables refer to the powder coated finish. For mill finish please remove the suffix PPC. Sundry items are not included as standard unless otherwise stated. Please order sundry items separately.

Heritage - Beaded Half Round Gutter and Fittings

Contents

Heritage Beaded Half Round socketed cast aluminium gutters are available in 2 sizes and 2 gutter lengths, together with a complete range of fittings. There is a pronounced feature bead on both lips. Can be finished to replicate cast iron or polyester powder coated using the raincote range on a BBA approved process.

Notes:
Beaded Half Round is an all socketed system and Union Clips are only available by special order.
All dimensions are in mm unless shown otherwise.
Gutter sizes shown are nominal.
T = Gutter Thickness (nominal +/- 1mm)

Gutters

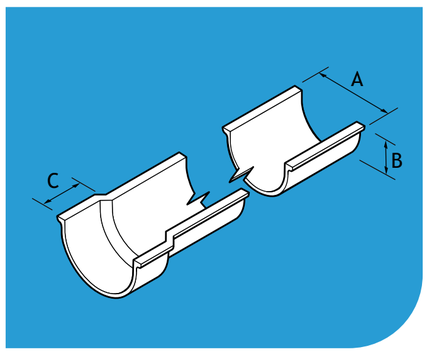

Gutter Size	Gutter Length	A	B	C	T	Weight (KG)	Product Code
113 (4.5”)	1830	131	52	47	4	3.2	BHR5/300PPC
125 (5”)	1830	143	56	47	4	3.33	BHR6/325PPC
113 (4.5”)	610	131	52	47	4	1.0	BHR5/303PPC
125 (5”)	610	143	56	47	4	1.0	BHR6/328PPC

Stop-Ends

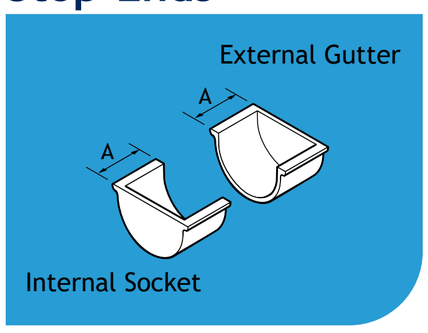

Gutter Size	Type	A	Product Code
113 (4.5”)	External	51	BHR5/306PPC
125 (5”)	External	51	BHR6/331PPC
113 (4.5”)	Internal	45	BHR5/318PPC
125 (5”)	Internal	45	BHR6/149PPC

Fascia Brackets

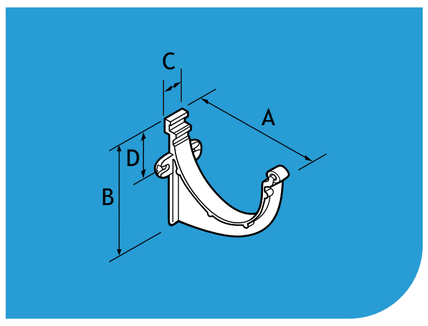

Gutter Size	A	B	C	D	Product Code
113 (4.5”)	155	75	38	35	BHR5/315PPC
125 (5”)	165	79	38	37	BHR6/337PPC

Stop End Outlet - with Socket

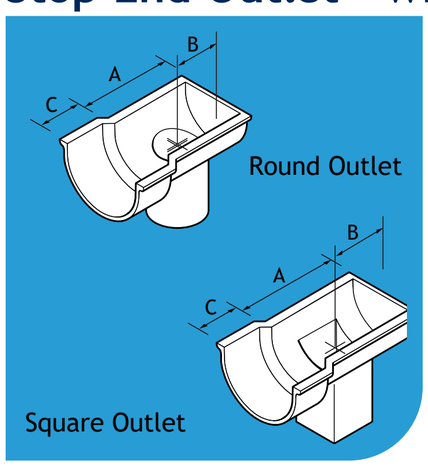

Gutter Size	Pipe Size	A	B	C	Product Code
113 (4.5”)	63 Dia	213	106	47	BHR5/RO25SEPPC
125 (5”)	63 Dia	213	106	47	BHR6/RO25SEPPC
113 (4.5”)	75 Dia	213	106	47	BHR5/RO30SEPPC
125 (5”)	75 Dia	213	106	47	BHR6/RO30SEPPC
113 (4.5”)	75 x 75 Dia	213	106	47	BHR5/SO33SEPPC
125 (5”)	75 x 75 Dia	213	106	47	BHR6/SO33SEPPC

Note: The products are available in plain mill finish or polyester powder coated using a BBA approved process. Product codes in the tables refer to the powder coated finish. For mill finish please remove the suffix PPC. Sundry items are not included as standard unless otherwise stated. Please order sundry items separately.

Heritage - Beaded Half Round Gutter and Fittings - Cont.

Running Outlet - with Single Spigot/Socket

Note: designed to fit heritage socketed aluminium pipes. Add suffix /f to product code to fit flushjoint or guardian pipes

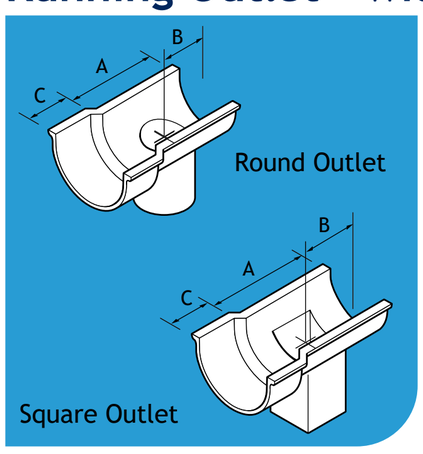

Gutter Size	Pipe Size	A	B	C	Product Code
113 (4.5”)	63	213	106	47	BHR5/305PPC
125 (5”)	63	213	106	47	BHR6/330PPC
113 (4.5”)	75	213	106	47	BHR5/308PPC
125 (5”)	75	213	106	47	BHR6/333PPC
113 (4.5”)	75 x 75	213	106	47	BHR5/SO33PPC
125 (5”)	75 x 75	213	106	47	BHR6/SO33PPC

Running Outlet - with Double Socket

Note: designed to fit heritage socketed aluminium pipes. Add suffix /f to product code to fit flushjoint or guardian pipes

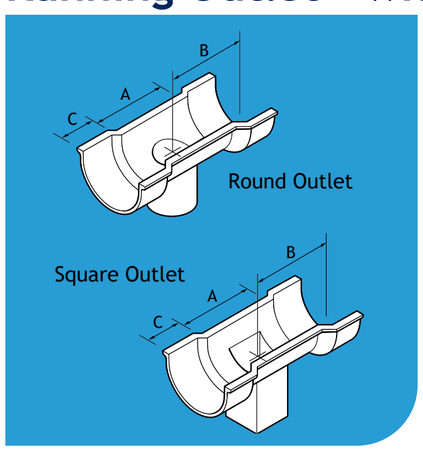

Gutter Size	Pipe Size	A	B	C	Product Code
113 (4.5”)	63	213	160	47	BHR5/304PPC
125 (5”)	63	213	160	47	BHR6/329PPC
113 (4.5”)	75	213	160	47	BHR5/307PPC
125 (5”)	75	213	160	47	BHR6/332PPC
113 (4.5”)	75 x 75	213	160	47	BHR5/384PPC
125 (5”)	75 x 75	213	160	47	BHR6/385PPC

90º Angles

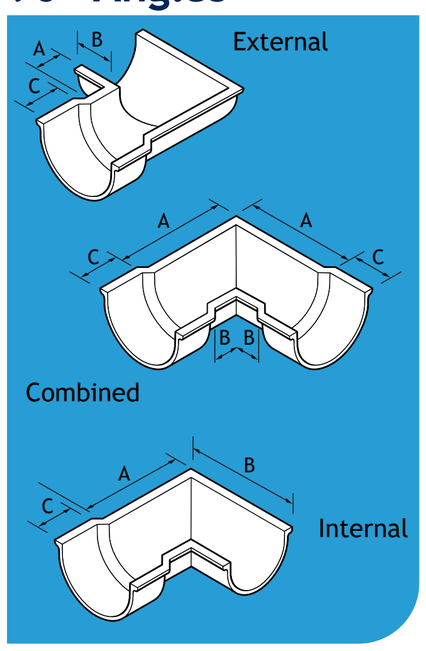

Gutter Size	Type	A	B	C	Product Code
113 (4.5”)	External	62	62	47	BHR5/311PPC
125 (5”)	External	62	62	47	BHR6/336PPC
113 (4.5”)	Combined	192	62	47	BHR5/309PPC
125 (5”)	Combined	192	62	47	BHR6/334PPC
113 (4.5”)	Internal	192	192	47	BHR5/310PPC
125 (5”)	Internal	192	192	47	BHR6/335PPC

135º Angles

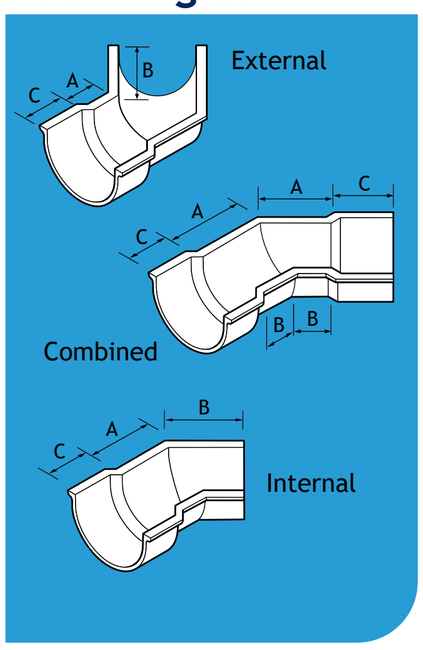

Gutter Size	Type	A	B	C	Product Code
113 (4.5”)	External	62	62	47	BHR5/EA135PPC
125 (5”)	External	62	62	47	BHR6/EA135PPC
113 (4.5”)	Combined	192	62	47	BHR5/IA135DPPC
125 (5”)	Combined	192	62	47	BHR6/IA135DPPC
113 (4.5”)	Internal	192	192	47	BHR5/IA135PPC
125 (5”)	Internal	192	192	47	BHR6/IA135PPC

Note: The products are available in plain mill finish or polyester powder coated using a BBA approved process. Product codes in the tables refer to the powder coated finish. For mill finish please remove the suffix PPC. Sundry items are not included as standard unless otherwise stated. Please order sundry items separately.

Heritage - Beaded Deep Run Gutter and Fittings

Contents

Heritage Beaded Deep Run gutters offer high flow capacity in one gutter size. A socketed system, which can be finished to replicate cast iron or with polyester powder coated using the raincote range on a BBA approved process.

Notes:
Beaded Deep Run is an all socketed system and Union Clips are only available by special order.
All dimensions are in mm unless shown otherwise.
Gutter sizes shown are nominal.
T = Gutter Thickness (nominal +/- 1mm)

Gutters

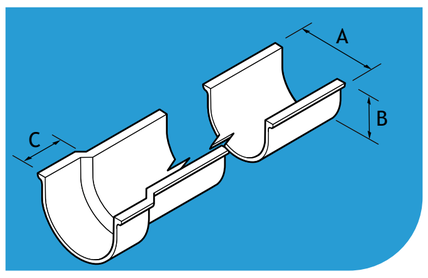

Gutter Size	Gutter Length	A	B	C	T	Weight (KG)	Product Code
113 x 75 (4.5” x 3”)	1830	137	76	47	4	2.6	HR4/243PPC
113 x 75 (4.5” x 3”)	610	137	76	47	4	0.9	HR4/246PPC

Stop-Ends

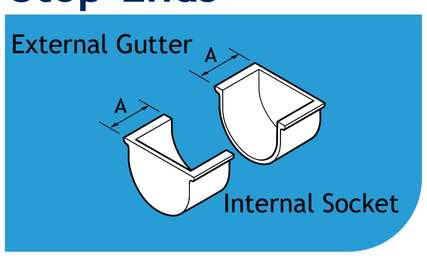

Gutter Size	Type	A	Product Code
113 x 75 (4.5” x 3”)	External	42	HR4/250PPC
113 x 75 (4.5” x 3”)	Internal	42	HR4/249PPC

Fascia Brackets

Note: Each fascia bracket is supplied with a nylon retaining clip

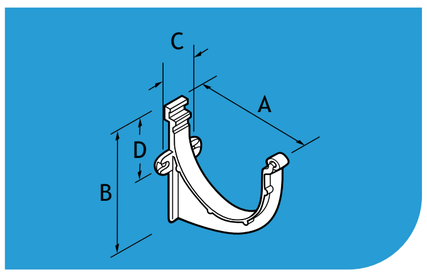

Gutter Size	A	B	C	D	Product Code
113 x 75 (4.5” x 3”)	155	111	38	55	HR4/251PPC

Running Outlet - with Double Socket

Note: designed to fit heritage socketed aluminium pipes. Add suffix /f to product code to fit flushjoint or guardian pipes

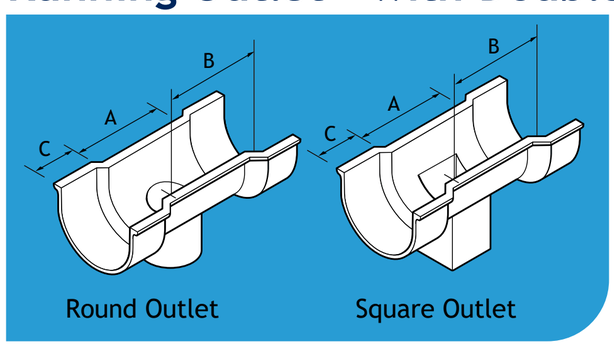

Gutter Size	Pipe Size	A	B	C	Product Code
113 x 75 (4.5” x 3”)	63	208	151	47	HR4/248PPC
113 x 75 (4.5” x 3”)	75	208	151	47	HR4/369PPC
113 x 75 (4.5” x 3”)	75 x 75	208	151	47	HR4/410PPC
113 x 75 (4.5” x 3”)	100 x 75	208	151	47	HR4/411PPC

90º Angles - with Double Socket

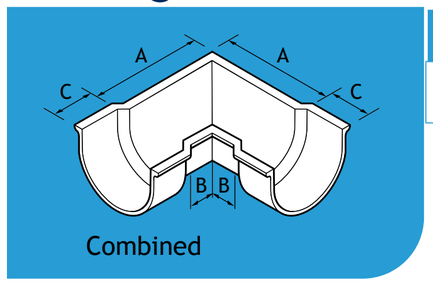

Gutter Size	Type	A	B	C	Product Code
113 x 75 (4.5” x 3”)	Combined Internal / External	200	55	47	HR4/247PPC

135º Angles - with Double Socket

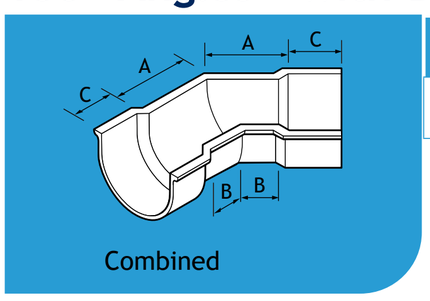

Gutter Size	Type	A	B	C	Product Code
113 x 75 (4.5” x 3”)	Combined Internal / External	112	55	47	HR4/371PPC

Note: The products are available in plain mill finish or polyester powder coated using a BBA approved process. Product codes in the tables refer to the powder coated finish. For mill finish please remove the suffix PPC. Sundry items are not included as standard unless otherwise stated. Please order sundry items separately.

Heritage - Victorian Ogee Gutters & Fittings

Contents

Heritage Victorian Ogee gutters are available in 3 sizes and 2 gutter lengths, together with a complete range of fittings. The traditional Ogee gutter profile is ideal for period applications and restoration. A left-hand socketed system, which can be finished to replicate cast iron or with polyester powder coated using the raincote range on a BBA approved process.

Notes:
All dimensions are in mm unless shown otherwise.
Gutter sizes shown are nominal.
Victorian Ogee is a left hand socket system
T = Gutter Thickness (nominal +/- 1mm)

Gutters

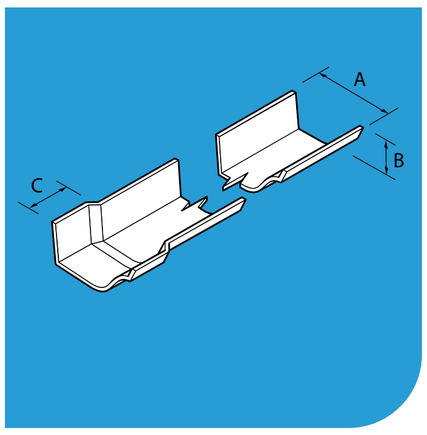

Gutter Size	Gutter Length	A	B	C	T	Weight (KG)	Product Code
100 (4”)	1830	110	54	47	4	2.6	OG1/31PPC
113 (4.5”)	1830	121	60	47	4	4.0	OG2/25PPC
125 (5”)	1830	135	68	47	4	4.0	OG3/173PPC
100 (4”)	610	110	54	47	4	0.9	OG1/156PPC
113 (4.5”)	610	121	60	47	4	1.4	OG2/157PPC
125 (5”)	610	135	68	47	4	1.4	OG3/176PPC

Union Clips

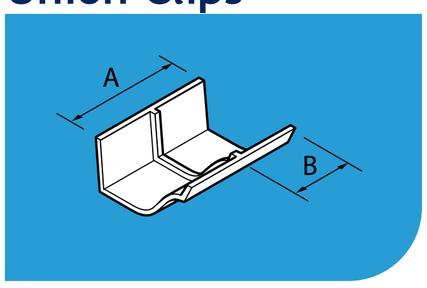

Gutter Size	A	B	Product Code
100 (4”)	98	47	OG1/41PPC
113 (4.5”)	98	47	OG2/55PPC
125 (5”)	98	47	OG3/184PPC

Stop-Ends

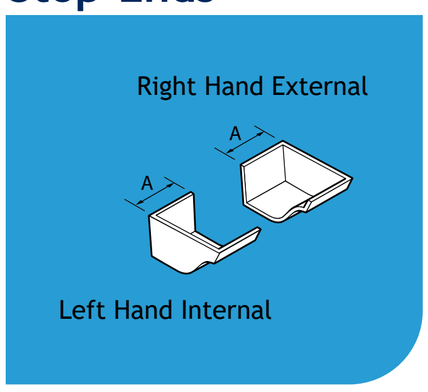

Gutter Size	Type	A	Product Code
100 (4”)	Right Hand External	51	OG1/43PPC
113 (4.5”)	Right Hand External	51	OG2/57PPC
125 (5”)	Right Hand External	51	OG3/186PPC
100 (4”)	Land Hand External	45	OG1/42PPC
113 (4.5”)	Land Hand External	45	OG2/56PPC
125 (5”)	Land Hand External	45	OG3/185PPC

Fascia Brackets

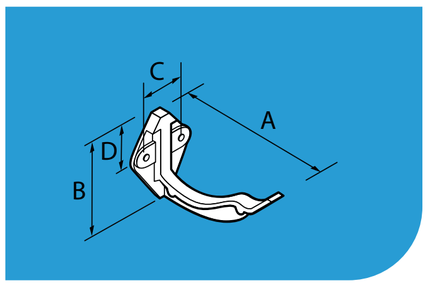

Gutter Size	A	B	C	D	Product Code
100 (4”)	125	80	38	32	OG1/44PPC
113 (4.5”)	137	85	38	38	OG2/58PPC
125 (5”)	150	92	38	38	OG3/187PPC

Note: The products are available in plain mill finish or polyester powder coated using a BBA approved process. Product codes in the tables refer to the powder coated finish. For mill finish please remove the suffix PPC. Sundry items are not included as standard unless otherwise stated. Please order sundry items separately.

Contents

Left Hand Stop End Outlet - with Spigot

Note: designed to fit heritage socketed aluminium pipes. Add /f to code to fit flushjoint or guardian pipes

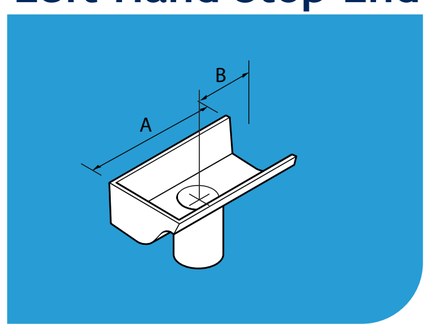

Gutter Size	Pipe Size	A	B	Product Code
100 (4”)	63	172	64	OG1/40PPC
113 (4.5”)	63	172	64	OG2/54PPC
125 (5”)	63	172	64	OG3/183PPC
125 (5”)	75	172	64	OG3/3/183PPC

Right Hand Stop End Outlet - with Socket

Note: designed to fit heritage socketed aluminium pipes. Add /f to code to fit flushjoint or guardian pipes

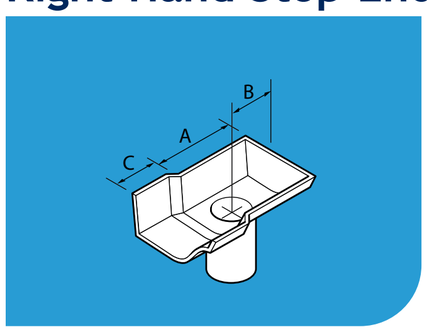

Gutter Size	Pipe Size	A	B	C	Product Code
100 (4”)	63	126	64	47	OG1/39PPC
113 (4.5”)	63	126	64	47	OG2/53PPC
125 (5”)	63	126	64	47	OG3/182PPC
125 (5”)	75	126	64	47	OG3/3/182PPC

Running Outlet - with Single Spigot/Socket

Note: designed to fit heritage socketed aluminium pipes. Add /f to code to fit flushjoint or guardian pipes

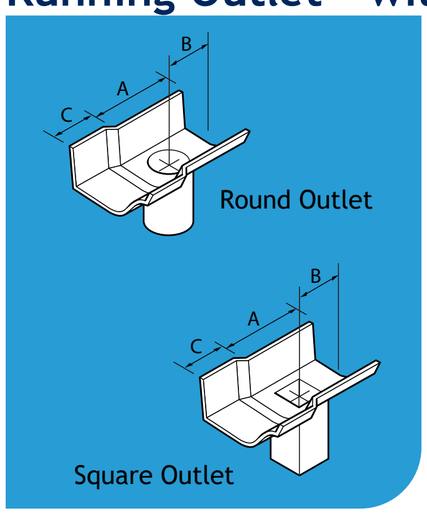

Gutter Size	Pipe Size	A	B	C	Product Code
100 (4”)	63	194	121	47	OG1/38PPC
113 (4.5”)	63	194	121	47	OG2/52PPC
125 (5”)	63	194	121	47	OG3/181PPC
113 (4.5”)	75	194	121	47	OG2/368PPC
125 (5”)	75	194	121	47	OG3/3/181PPC
100 (4”)	75 x 75	194	121	47	OG1/386PPC
113 (4.5”)	75 x 75	194	121	47	OG2/387PPC
125 (5”)	75 x 75	194	121	47	OG3/388PPC

90º Angles

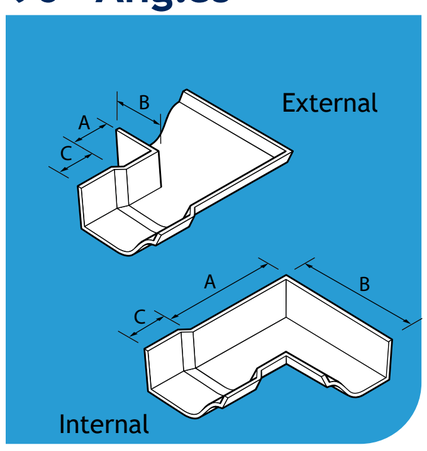

Gutter Size	Type	A	B	C	Product Code
100 (4”)	External	25	75	47	OG1/34PPC
113 (4.5”)	External	25	75	47	OG2/48PPC
125 (5”)	External	25	75	47	OG3/177PPC
100 (4”)	Internal	133	184	47	OG1/35PPC
113 (4.5”)	Internal	146	197	47	OG2/49PPC
125 (5”)	Internal	159	210	47	OG3/178PPC

135º Angles

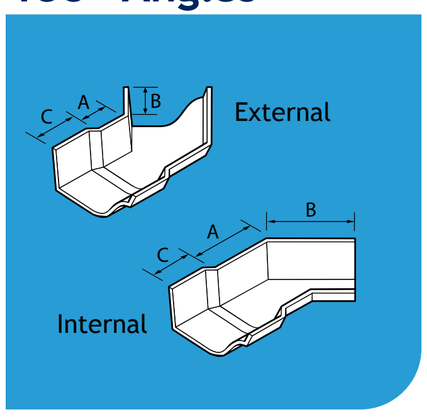

Gutter Size	Type	A	B	C	Product Code
100 (4”)	External	25	75	47	OG1/36PPC
113 (4.5”)	External	25	75	47	OG2/50PPC
125 (5”)	External	25	75	47	OG3/179PPC
100 (4”)	Internal	70	121	47	OG1/37PPC
113 (4.5”)	Internal	75	126	47	OG2/51PPC
125 (5”)	Internal	80	134	47	OG3/180PPC

Note: The products are available in plain mill finish or polyester powder coated using a BBA approved process. Product codes in the tables refer to the powder coated finish. For mill finish please remove the suffix PPC. Sundry items are not included as standard unless otherwise stated. Please order sundry items separately.

Heritage - Moulded Gutters & Fittings

Contents

Heritage Moulded gutters are available in 3 sizes and 2 gutter lengths, together with a complete range of fittings. A socketed system, which can be finished to replicate cast iron or with polyester powder coated using the raincote range on a BBA approved process. Ideal for restoration or contemporary applications.

Notes:
All dimensions are in mm unless shown otherwise.
Gutter sizes shown are nominal.
100 x 75 & 125 x 100 moulded gutters are left hand spigot.
150 x 100 moulded gutter is right hand spigot.
T = Gutter Thickness (nominal +/- 1mm)

Gutters

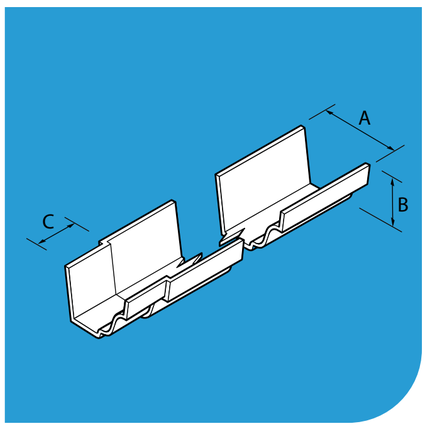

Gutter Size	Gutter Length	A	B	C	T	Weight (KG)	Product Code
100 x 75 (4” x 3”)	1830	108	76	50	4	4.0	MG2/217PPC
125 x 100 (5” x 4”)	1830	140	102	50	4	5.4	MG1/196PPC
150 x 100 (6” x 4”)	1830	162	102	50	4	5.6	MG3/259PPC
100 x 75 (4” x 3”)	610	108	76	50	4	1.4	MG2/220PPC
125 x 100 (5” x 4”)	610	140	102	50	4	1.8	MG1/199PPC
150 x 100 (6” x 4”)	610	162	102	50	4	1.9	MG3/262PPC

Union Clips

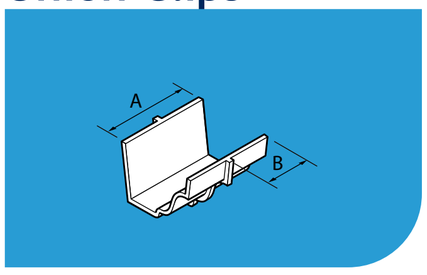

Gutter Size	A	B	Product Code
100 x 75 (4” x 3”)	100	46	MG2/231PPC
125 x 100 (5” x 4”)	100	46	MG1/213PPC
150 x 100 (6” x 4”)	100	46	MG3/269PPC

Stop-Ends

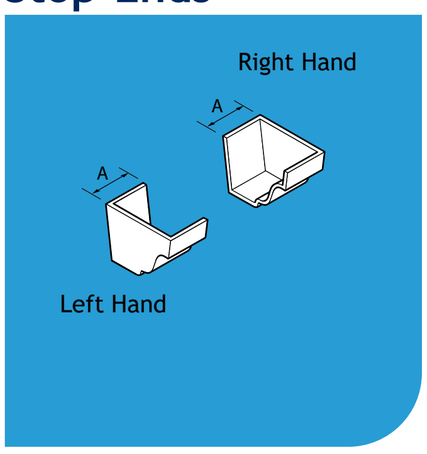

Gutter Size	Type	A	Product Code
100 x 75 (4” x 3”)	External Left Hand	50	MG2/233PPC
125 x 100 (5” x 4”)	External Left Hand	50	MG1/215PPC
150 x 100 (6” x 4”)	External Right Hand	50	MG3/271PPC
100 x 75 (4” x 3”)	Internal Right Hand	50	MG2/232PPC
125 x 100 (5” x 4”)	Internal Right Hand	50	MG1/214PPC
150 x 100 (6” x 4”)	Internal Left Hand	50	MG3/270PPC

Fixing Supports

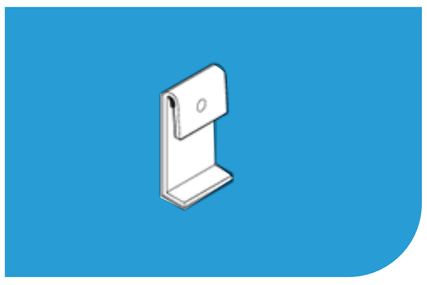

Gutter Size	A	B	C	Product Code
100 x 75 (4” x 3”)	70	10	36	MG2/373PPC
125 x 100 (5” x 4”)	94	12	36	MG1/374PPC
150 x 100 (6” x 4”)	94	12	36	MG3/375PPC

When direct fixing this gutter, use 3No per 1.83 metre length / 2No Per angle 1No, Per outlet

Fascia Brackets

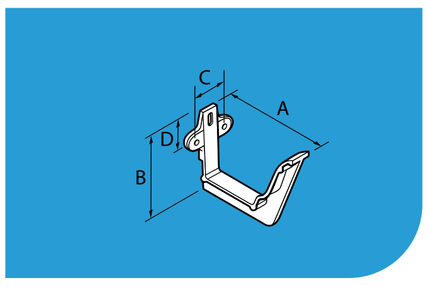

Gutter Size	A	B	C	D	Product Code
100 x 75 (4” x 3”)	136	135	38	38	MG2/234PPC
125 x 100 (5” x 4”)	135	136	38	39	MG1/216PPC
150 x 100 (6” x 4”)	162	125	38	39	MG3/268PPC

Note: The products are available in plain mill finish or polyester powder coated using a BBA approved process. Product codes in the tables refer to the powder coated finish. For mill finish please remove the suffix PPC. Sundry items are not included as standard unless otherwise stated. Please order sundry items separately.

Heritage - Moulded Gutters & Fittings - Cont.

Contents

Running Outlet - with Single Spigot

Note: Designed to fit Heritage socketed aluminium pipes. Add suffix /F to product code to fit Flushjoint or Guardian pipes

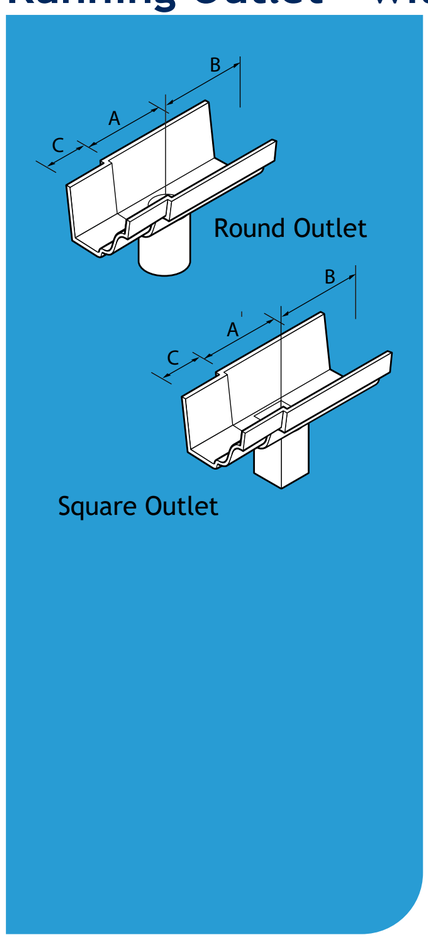

Gutter Size	Pipe Size	A	B	C	Spigot	Product Code
100 x 75 (4” x 3”)	63	190	120	50	Left Hand	MG2/225PPC
125 x 100 (5” x 4”)	63	190	120	50	Left Hand	MG1/205PPC
150 x 100 (6” x 4”)	63	190	120	50	Right Hand	MG3/267PPC
100 x 75 (4” x 3”)	75	190	120	50	Left Hand	MG2/370PPC
125 x 100 (5” x 4”)	75	190	120	50	Left Hand	MG1/204PPC
150 x 100 (6” x 4”)	75	190	120	50	Right Hand	MG3/266PPC
125 x 100 (5” x 4”)	100	190	120	50	Left Hand	MG1/253PPC
150 x 100 (6” x 4”)	100	190	120	50	Right Hand	MG3/265PPC
100 x 75 (4” x 3”)	75 x 75	190	120	50	Left Hand	MG2/356PPC
125 x 100 (5” x 4”)	75 x 75	190	120	50	Left Hand	MG1/358PPC
150 x 100 (6” x 4”)	75 x 75	190	120	50	Right Hand	MG3/361PPC
100 x 75 (4” x 3”)	100 x 75	190	120	50	Left Hand	MG2/357PPC
125 x 100 (5” x 4”)	100 x 75	190	120	50	Left Hand	MG1/359PPC
150 x 100 (6” x 4”)	100 x 75	190	120	50	Right Hand	MG3/362PPC
125 x 100 (5” x 4”)	100 x 100	190	120	50	Left Hand	MG1/360PPC
150 x 100 (6” x 4”)	100 x 100	190	120	50	Right Hand	MG3/363PPC

90º Angles

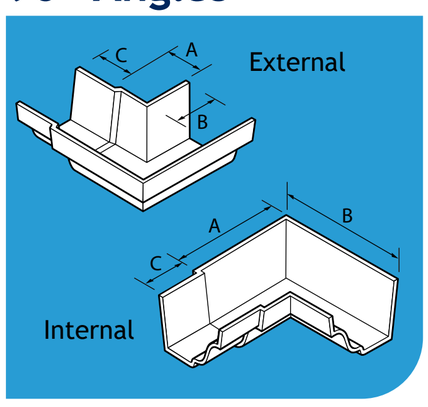

Gutter Size	Type	A	B	C	Spigot	Product Code
100 x 75 (4” x 3”)	External Left Hand	25	75	50	Left Hand	MG2/221PPC
125 x 100 (5” x 4”)	External Left Hand	25	75	50	Left Hand	MG1/200PPC
150 x 100 (6” x 4”)	External Right Hand	25	75	50	Right Hand	MG3/263PPC
100 x 75 (4” x 3”)	Internal Right Hand	127	183	50	Left Hand	MG2/222PPC
125 x 100 (5” x 4”)	Internal Right Hand	158	215	50	Left Hand	MG1/201PPC
150 x 100 (6” x 4”)	Internal Left Hand	185	238	50	Right Hand	MG3/264PPC

135º Angles

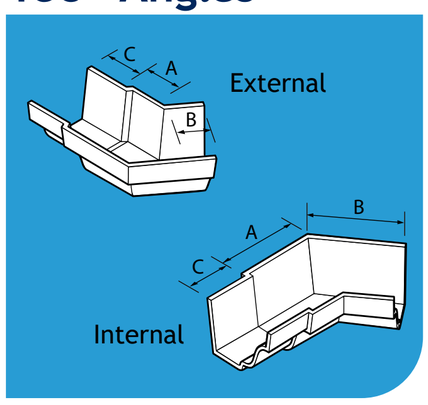

Gutter Size	Type	A	B	C	Spigot	Product Code
100 x 75 (4” x 3”)	External Left Hand	25	75	50	Left Hand	MG2/223PPC
125 x 100 (5” x 4”)	External Left Hand	25	75	50	Left Hand	MG1/202PPC
150 x 100 (6” x 4”)	External Right Hand	25	75	50	Right Hand	MG3/272PPC
100 x 75 (4” x 3”)	Internal Right Hand	127	183	50	Left Hand	MG2/224PPC
125 x 100 (5” x 4”)	Internal Right Hand	158	215	50	Left Hand	MG1/203PPC
150 x 100 (6” x 4”)	Internal Left Hand	185	238	50	Right Hand	MG3/273PPC

145º Angles

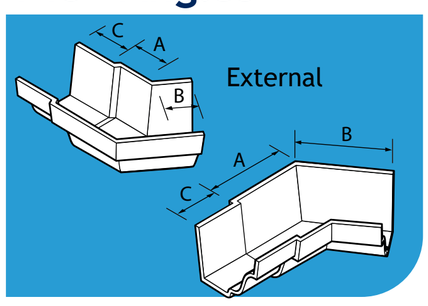

Gutter Size	Type	A	B	C	Spigot	Product Code
125 x 100 (5” x 4”)	External Left Hand	25	75	50	Left Hand	MG1/329PPC
150 x 100 (6” x 4”)	External Right Hand	25	75	50	Right Hand	MG3/333PPC
125 x 100 (5” x 4”)	Internal Right Hand	97	47	50	Left Hand	MG1/330PPC
150 x 100 (6” x 4”)	Internal Left Hand	118	68	50	Right Hand	MG3/334PPC

150º Angles

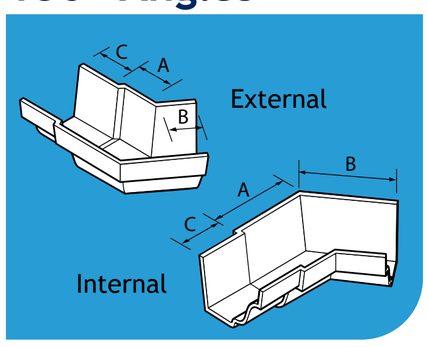

Gutter Size	Type	A	B	C	Spigot	Product Code
125 x 100 (5” x 4”)	External Left Hand	25	75	50	Left Hand	MG1/331PPC
150 x 100 (6” x 4”)	External Right Hand	25	75	50	Right Hand	MG3/335PPC
125 x 100 (5” x 4”)	Internal Right Hand	94	44	50	Left Hand	MG1/332PPC
150 x 100 (6” x 4”)	Internal Left Hand	118	68	50	Right Hand	MG3/336PPC

Note: The products are available in plain mill finish or polyester powder coated using a BBA approved process. Product codes in the tables refer to the powder coated finish. For mill finish please remove the suffix PPC. Sundry items are not included as standard unless otherwise stated. Please order sundry items separately.

Heritage - Cast Aluminium Bracketry

Contents

Alumasc can provide traditional style Bracketry for all of its standard gutter profiles. Where building detailing dictates, Alumasc can provide bespoke Bracketry to meet individual project requirements.

Universal Brackets

For use with standard Fascia Bracket (purchased separately).

Universal Rafter Arm

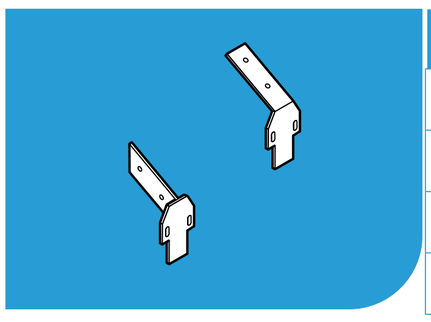

Type	Angle	Product Code
Top Fix	26°	UNI632915
Top Fix	40°	UNI632916
Side Fix	26°	UNI632917
Side Fix	40°	UNI632918

Universal Drive in Rise & Fall

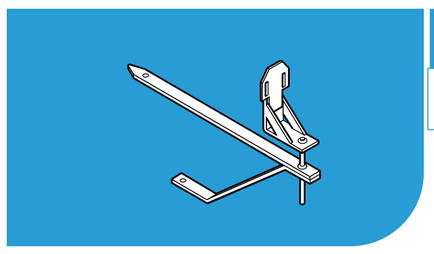

Gutter Size	Product Code
Universal	UNI632919

Note: HR6FB Does not work with the Universal Drive-in Rise & Fall Bracket and Universal Rafter Arm

Traditional 'Old' Style Gutter Brackets

Top Fix Rafter Arm - Half Round

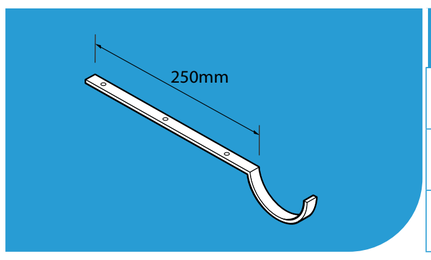

Gutter Size	Product Code
100	HR1/RB/TFPPC
113	HR2/RB/TFPPC
125	HR3/RB/TFPPC

Top Fix Rafter Arm - Beaded Half Round/Deep Run

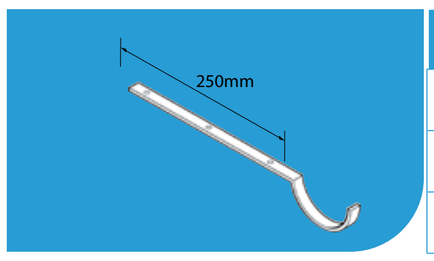

Gutter Size	Product Code
113	BHR5/RB/TFPPC
125	BHR6/RB/TFPPC
113 x 75	HR4/RB/TFPPC

Note: Supplied with 40° angle of pitch as standard. Other pitches catered for on request – please specify pitch angle required.

Top Fix Rafter Arm - Victorian Ogee

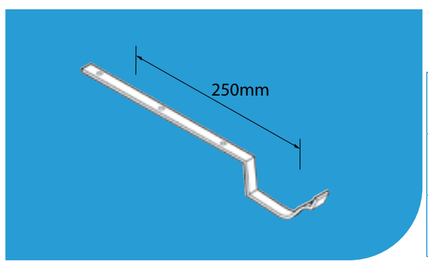

Gutter Size	Product Code
100	OG1/RB/TFPPC
113	OG2/RB/TFPPC
125	OG3/RB/TFPPC

Top Fix Rafter Arm - Moulded

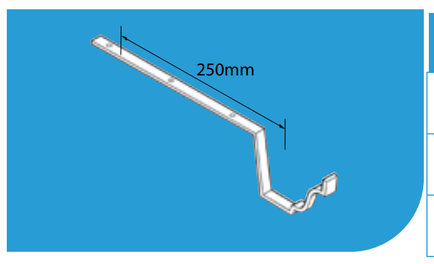

Gutter Size	Product Code
100 x 75	MG2/RB/TFPPC
125 x 100	MG1/RB/TFPPC
150 x 100	MG3/RB/TFPPC

Note: Supplied with 40° angle of pitch as standard. Other pitches catered for on request – please specify pitch angle required.

Side Fix Rafter Arm - Half Round

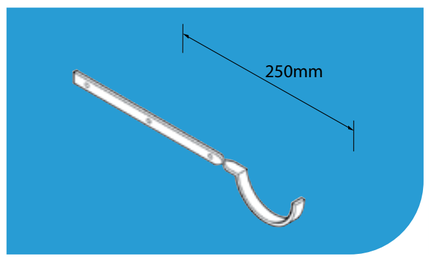

Gutter Size	Product Code
100	HR1/RB/SFPPC
113	HR2/RB/SFPPC
125	HR3/RB/SFPPC

Side Fix Rafter Arm - Beaded Half Round/Deep Run

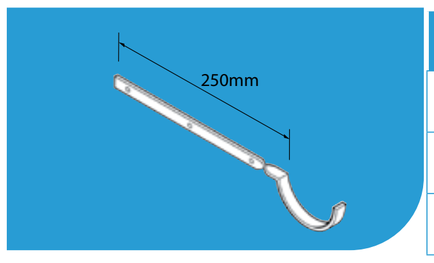

Gutter Size	Product Code
113	BHR5/RB/SFPPC
125	BHR6/RB/SFPPC
113 x 75	HR4/RB/SFPPC

Note: Supplied with 40° angle of pitch as standard. Other pitches catered for on request – please specify pitch angle required.

Side Fix Rafter Arm - Victorian Ogee

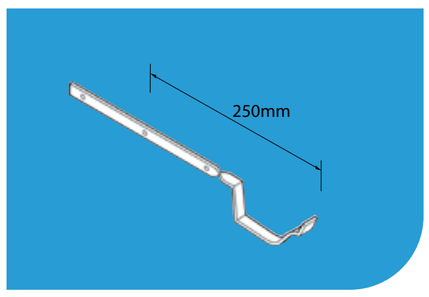

Gutter Size	Product Code
100	OG1/RB/SFPPC
113	OG2/RB/SFPPC
125	OG3/RB/SFPPC

Side Fix Rafter Arm - Moulded

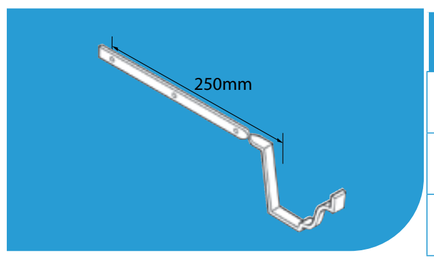

Gutter Size	Product Code
100 x 75	MG2/RB/SFPPC
125 x 100	MG1/RB/SFPPC
150 x 100	MG3/RB/SFPPC

Note: Supplied with 40° angle of pitch as standard. Other pitches catered for on request – please specify pitch angle required.

Note: The products are available in plain mill finish or polyester powder coated using a BBA approved process. Product codes in the tables refer to the powder coated finish. For mill finish please remove the suffix PPC. Sundry items are not included as standard unless otherwise stated. Please order sundry items separately.

Heritage - Cast Aluminium Bracketry - Cont.

Contents

Rise & Fall - Half Round

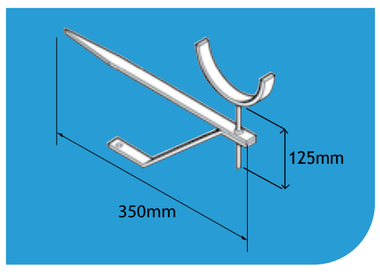

Gutter Size	Product Code
100	HR1/R&F/ASSYPPC
113	HR2/R&F/ASSYPPC
125	HR3/R&F/ASSYPPC

Rise & Fall - Beaded Half Round/Deep Run

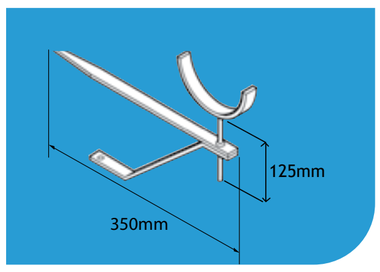

Gutter Size	Product Code
113	BHR5/R&F/ASSYPPC
125	BHR6/R&F/ASSYPPC
113 x 75	HR4/R&F/ASSYPPC

Rise & Fall - Victorian Ogee

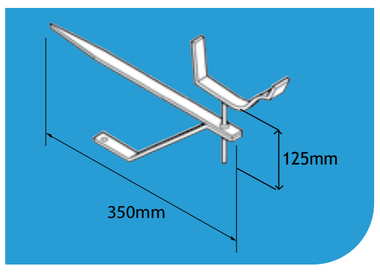

Gutter Size	Product Code
100	OG1/R&F/ASSYPPC
113	OG2/R&F/ASSYPPC
125	OG3/R&F/ASSYPPC

Rise & Fall - Moulded

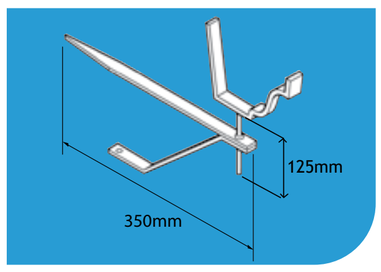

Gutter Size	Product Code
100 x 75	MG2/R&F/ASSYPPC
125 x 100	MG1/R&F/ASSYPPC
150 x 100	MG3/R&F/ASSYPPC

Bespoke Bracketry

Alumasc can design and manufacture a variety of Bracketry solution for gutters and pipes to create an integrated system solution. Such detailing can often be used to support fascia and soffit configurations.

Ornate holderbats and earbelts can be detailed to provide a unique, distinguished appearance to a rainwater stack.

Where standard fitting dimensions do not suit the project's requirements, Alumasc can fabricate its gutter and pipe Bracketry systems to accommodate building design.

Note: The products are available in plain mill finish or polyester powder coated using a BBA approved process. Product codes in the tables refer to the powder coated finish. For mill finish please remove the suffix PPC. Sundry items are not included as standard unless otherwise stated. Please order sundry items separately.

Heritage - Circular Pipes & Fittings

Contents

Heritage Circular Pipes are available in 4 pipe diameters and 3 pipe lengths, together with a complete range of fittings. Complementary rainwater heads are also available. Can be factory finished to replicate cast iron or with polyester powder coated using the raincote range on a BBA approved process.

Notes: Pipes are extruded sections with cast sockets. The majority of fixings are cast, however certain fittings are fabricated.
All dimensions are in mm unless shown otherwise.
Pipe sizes shown are nominal.
All circular sockets are an interference fit with exception of 150mm which are fectory welded.

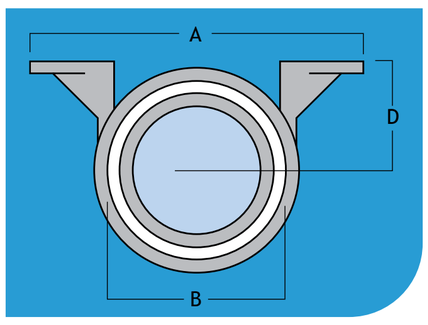

Sockets (Nominal)	63	75	100	150
A Length of flange overall	144	160	187	245
B Internal diameter	73.5 to 70	85 to 81.5	110 to 108	163 to 160
C Height of socket	89	95	90	125
D Distance from Centre line of pipe to wall	65	71	90	118

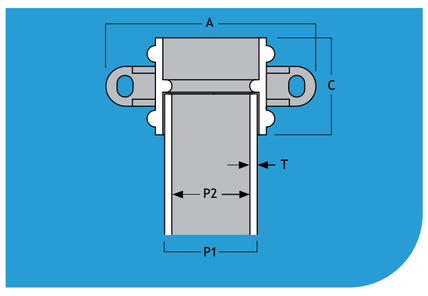

Pipes (Nominal)	63	75	100	150
P1 External Diameter	63	76.5	102	152
P2 Internal Diameter	60.5	74	98.5	147
T Thickness	1.22	1.22	1.6	2.5

Pipes - With and Without Ears

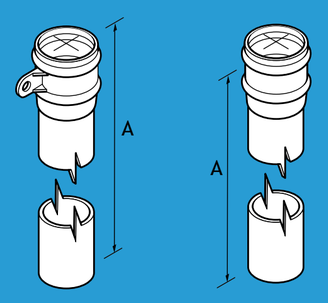

Note: The codes given above are for pipes with ears. For pipes without ears suffix codes with /NE 63, 75 and 100mm pipes are supplied with separate interference-fit cast sockets

Pipe Size	A	Product Code
63 (2.5”)	3000	RW1/3MPPC
63 (2.5”)	2000	RW1/2MPPC
63 (2.5”)	1000	RW1/1MPPC
75 (3”)	3000	RW2/3MPPC
75 (3”)	2000	RW2/2MPPC
75 (3”)	1000	RW2/1MPPC
100 (4”)	3000	RW3/3MPPC
100 (4”)	2000	RW3/2MPPC
100 (4”)	1000	RW3/1MPPC
150 (6”)	3000	RW60/3MPPC
150 (6”)	2000	RW60/2MPPC
150 (6”)	1000	RW60/1MPPC

Round Pipe Sockets - With Ears

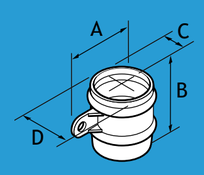

Pipe Size	A	B	C	D	Product Code
63 (2.5”)	144	89	65	73.5 to 70	RW1/240PPC
75 (3”)	160	95	71	86.5 to 81	RW2/241PPC
100 (4”)	187	90	90	110 to 108	RW3/242PPC
150 (6”)	245	125	118	163 to 160	RW60/PSPPC

Note: The products are available in plain mill finish or polyester powder coated using a BBA approved process. Product codes in the tables refer to the powder coated finish. For mill finish please remove the suffix PPC. Sundry items are not included as standard unless otherwise stated. Please order sundry items separately.

Contents

Thickwall Pipes - With Ears

Note: The codes given above are for pipes with ears. For pipes without ears suffix codes with /NE
63, 75 and 100mm pipes are supplied with separate interference-fit cast sockets

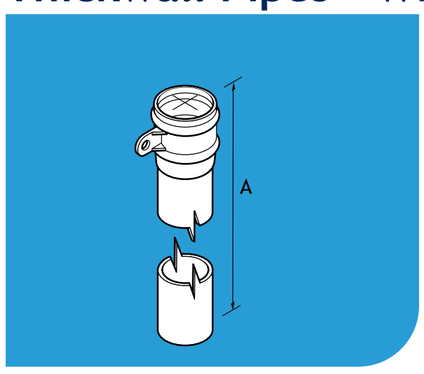

Pipe Size	A	Thickness	Product Code
63 (2.5”)	2000	3	RWT/25/3MPPC
75 (3”)	2000	3	RWT/30/2MPPC
100 (4”)	2000	3	RWT/40/2MPPC

Bends - Without Ears

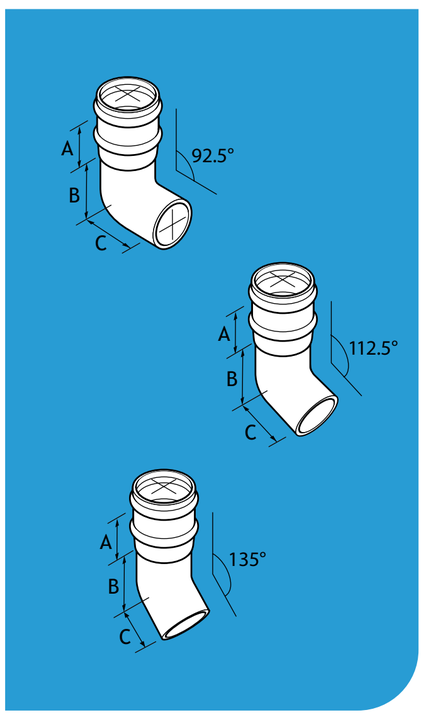

Pipe Size	Type	A	B	C	Product Code
63 (2.5”)	92.5 Degree	89	21	140	RW1/69PPC
75 (3”)	92.5 Degree	95	15	146	RW2/83PPC
100 (4”)	92.5 Degree	90	80	159	RW3/128PPC
150 (6”)	92.5 Degree	125	114	109	RW60/B/92PPC
63 (2.5”)	112.5 Degree	89	32	110	RW1/70PPC
75 (3”)	112.5 Degree	95	26	120	RW2/84PPC
100 (4”)	112.5 Degree	90	43	110	RW3/129PPC
150 (6”)	112.5 Degree	125	85	144	RW60/B/112PPC
63 (2.5”)	135 Degree	89	41	107	RW1/165PPC
75 (3”)	135 Degree	95	35	120	RW2/327PPC
100 (4”)	135 Degree	90	43	110	RW3/328PPC
150 (6”)	135 Degree	125	85	144	RW60/B/135PPC

Branches - Without Ears

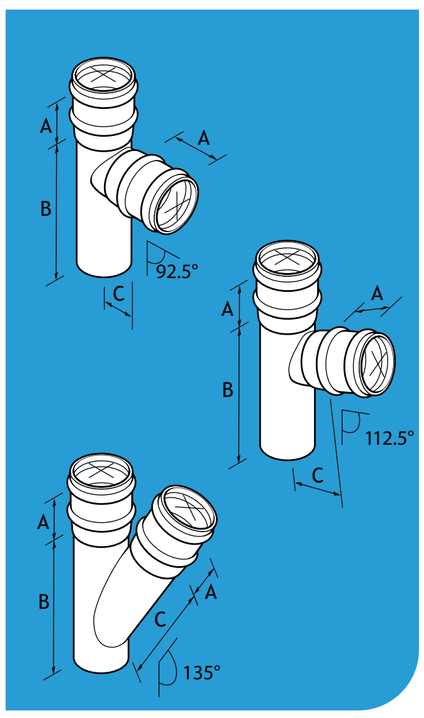

Pipe Size	Type	A	B	C	Product Code
63 (2.5”)	92.5 Degree	70	200	79	RW1/67PPC
75 (3”)	92.5 Degree	70	220	85	RW2/81PPC
100 (4”)	92.5 Degree	90	240	108	RW3/126PPC
150 (6”)	92.5 Degree	125	315	206	RW60/BR/92PPC
63 (2.5”)	112.5 Degree	70	200	79	RW1/68PPC
75 (3”)	112.5 Degree	70	220	85	RW2/82PPC
100 (4”)	112.5 Degree	65	265	108	RW3/127PPC
150 (6”)	112.5 Degree	125	335	206	RW60/BR/112PPC
63 (2.5”)	135 Degree	70	200	79	RW1/BR/135PPC
75 (3”)	135 Degree	70	220	85	RW2/BR/135PPC
100 (4”)	135 Degree	90	300	180	RW3/BR/135PPC
150 (6”)	135 Degree	125	375	245	RW60/BR/135PPC

Access Pipes - Without Ears

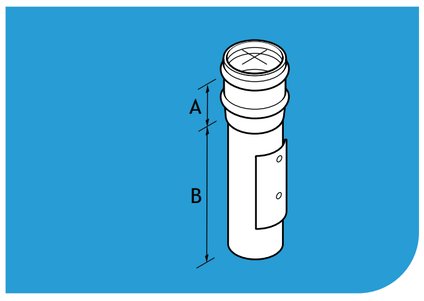

Pipe Size	A	B	Product Code
63 (2.5”)	95	245	RW1/256PPC
75 (3”)	95	245	RW2/257PPC
100 (4”)	95	245	RW3/258PPC
150 (6”)	125	295	RW60/ACPPPC

Note: The products are available in plain mill finish or polyester powder coated using a BBA approved process. Product codes in the tables refer to the powder coated finish. For mill finish please remove the suffix PPC. Sundry items are not included as standard unless otherwise stated. Please order sundry items separately.

Contents

112.5° One Part Offsets - Without Ears

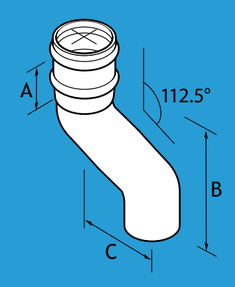

Note: Offsets in the 150mm Rainwater pipe range are fabricated, cut and mitred.

Pipe Size	Offset	A	B	C	Product Code
63 (2.5”)	75 (3”)	70	184	76	RW1/87PPC
63 (2.5”)	113 (4.5”)	70	200	114	RW1/163PPC
63 (2.5”)	150 (6”)	70	215	152	RW1/62PPC
63 (2.5”)	225 (9”)	70	247	228	RW1/63PPC
63 (2.5”)	300 (12”)	70	279	304	RW1/64PPC
63 (2.5”)	375 (15”)	70	310	381	RW1/65PPC
63 (2.5”)	450 (18”)	70	342	457	RW1/88PPC
63 (2.5”)	525 (21”)	70	373	533	RW1/89PPC
63 (2.5”)	600 (24”)	70	405	609	RW1/164PPC
63 (2.5”)	675 (27”)	70	436	685	RW1/190PPC
63 (2.5”)	750 (30”)	70	468	762	RW1/191PPC
75 (3”)	75 (3”)	70	187	76	RW2/90PPC
75 (3”)	113 (4.5”)	70	203	114	RW2/168PPC
75 (3”)	150 (6”)	70	218	152	RW2/76PPC
75 (3”)	225 (9”)	70	250	228	RW2/77PPC
75 (3”)	300 (12”)	70	282	304	RW2/78PPC
75 (3”)	375 (15”)	70	313	381	RW2/79PPC
75 (3”)	450 (18”)	70	345	457	RW2/91PPC
75 (3”)	525 (21”)	70	376	533	RW2/92PPC
75 (3”)	600 (24”)	70	408	609	RW2/169PPC
75 (3”)	675 (27”)	70	438	685	RW2/192PPC
75 (3”)	750 (30”)	70	471	762	RW2/193PPC
100 (4”)	75 (3”)	70	205	76	RW3/118PPC
100 (4”)	113 (4.5”)	70	221	114	RW3/171PPC
100 (4”)	150 (6”)	70	236	152	RW3/119PPC
100 (4”)	225 (9”)	70	268	228	RW3/120PPC
100 (4”)	300 (12”)	70	300	304	RW3/121PPC
100 (4”)	375 (15”)	70	331	381	RW3/122PPC
100 (4”)	450 (18”)	70	363	457	RW3/123PPC
100 (4”)	525 (21”)	70	394	533	RW3/124PPC
100 (4”)	600 (24”)	70	426	609	RW3/172PPC
100 (4”)	675 (27”)	70	457	685	RW3/194PPC
100 (4”)	750 (30”)	70	489	762	RW3/195PPC
150 (6”)	75 (3”)	70	318	76	RW60/PO/3PPC
150 (6”)	150 (6”)	70	334	152	RW60/PO/6PPC
150 (6”)	225 (9”)	70	349	228	RW60/PO/9PPC
150 (6”)	300 (12”)	70	413	304	RW60/PO/12PPC
150 (6”)	375 (15”)	70	444	381	RW60/PO/15PPC
150 (6”)	450 (18”)	70	476	457	RW60/PO/18PPC
150 (6”)	525 (21”)	70	539	533	RW60/PO/21PPC
150 (6”)	600 (24”)	70	570	609	RW60/PO/24PPC

Note: The products are available in plain mill finish or polyester powder coated using a BBA approved process. Product codes in the tables refer to the powder coated finish. For mill finish please remove the suffix PPC. Sundry items are not included as standard unless otherwise stated. Please order sundry items separately.

Contents

Introduction
Cast Aluminium
Contemporary Aluminium
Cast Iron
Steel
Design & Specification
Installation Guides

112.5° Two Part Offsets - Without Ears

Note: Can be cut on site, min and max dimensions below

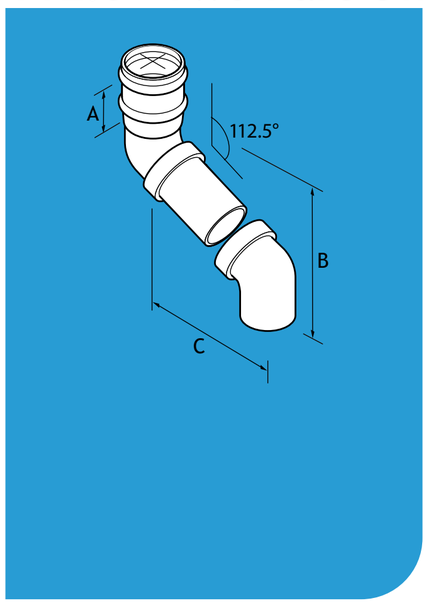

Pipe Size	Offset	A	B	C	MAX	MIN	Product Code
63 (2.5”)	225 (9”)	70	247	229	265	100	RW1/350PPC
63 (2.5”)	375 (15”)	70	310	381	400	100	RW1/351PPC
63 (2.5”)	450 (18”)	70	342	457	470	100	RW1/352PPC
63 (2.5”)	675 (27”)	70	436	685	710	100	RW1/353PPC
63 (2.5”)	900 (36”)	70	529	914	920	100	RW1/354PPC
75 (3”)	225 (9”)	70	250	229	260	100	RW2/343PPC
75 (3”)	375 (15”)	70	313	381	400	100	RW2/344PPC
75 (3”)	450 (18”)	70	345	457	470	100	RW2/345PPC
75 (3”)	675 (27”)	70	438	685	700	100	RW2/346PPC
75 (3”)	900 (36”)	70	534	914	940	100	RW2/347PPC

112.5° Two Part Offsets - Without Ears Continued

Note: Can be cut on site, min and max dimensions below

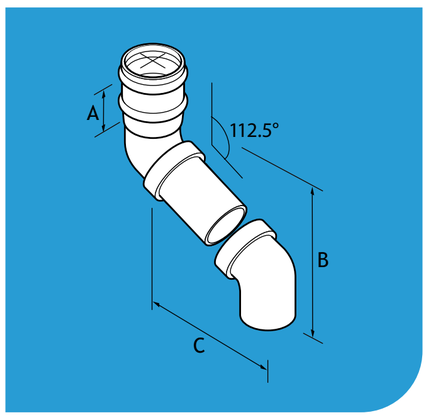

Pipe Size	Offset	A	B	C	MAX	MIN	Product Code
100 (4")	225 (9”)	70	-	-	297mm	125mm	RW3/2/228PC
100 (4’’)	375 (15”)	70	-	-	438mm	125mm	RW3/2/381PC
100 (4’’)	450 (18”)	70	-	-	508mm	125mm	RW3/2/457PC
100 (4’’)	675 (27”)	70	-	-	719mm	125mm	RW3/2/685PC
100 (4’’)	900 (36”)	70	-	-	930mm	125mm	RW3/2/914PC

Shoes - With and Without Ears

Note: The codes given below are for pipes with ears. For pipes without ears suffix codes with /NE

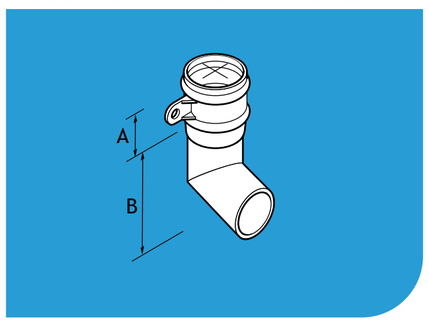

Pipe Size	A	B	Product Code
63 (2.5”)	55	105	RW1/66PPC
75 (3”)	64	112	RW2/80PPC
100 (4”)	69	135	RW3/125PPC
150 (6”)	125	215	RW60/SHPPC

Standard Base Clips

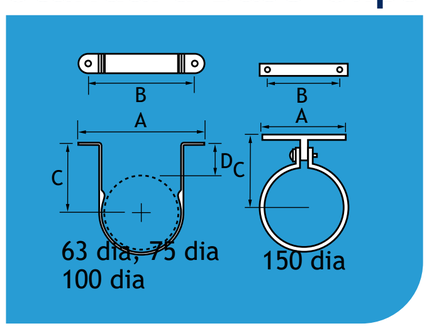

Pipe Size	A	B	C	D	Product Code
63 (2.5”)	124	100	65	33.5	RW1/236PPC
75 (3”)	137	112	71	33	RW2/237PPC
100 (4”)	163	138	90	39	RW3/238PPC
150 (6”)	255	215	121		RW60/PCPPC

Extended Base Clips

Note: Dimension C can be altered to suit as it can be cut down on site.

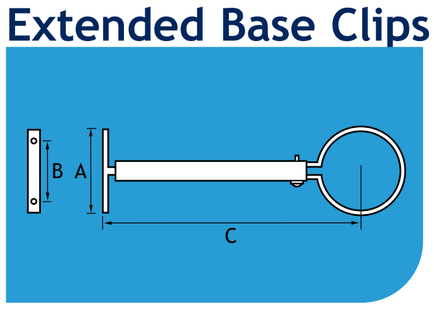

Pipe Size	A	B	C	Product Code
63 (2.5”)	87	47	279	RW1/364PPC
75 (3”)	87	47	285	RW2/365PPC
100 (4”)	87	47	304	RW3/366PPC

Small Base Clips

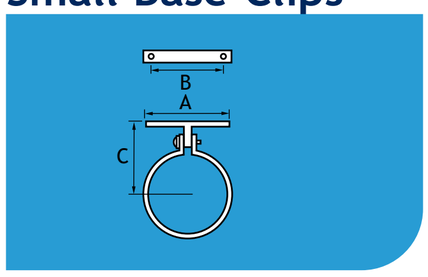

Pipe Size	A	B	C	Product Code
63 (2.5”)	87	47	74	RW1/SB/PCPPC
75 (3”)	87	47	80	RW2/SB/PCPPC
100 (4”)	87	47	92	RW3/SB/PCPPC

Note: The products are available in plain mill finish or polyester powder coated using a BBA approved process. Product codes in the tables refer to the powder coated finish. For mill finish please remove the suffix PPC. Sundry items are not included as standard unless otherwise stated. Please order sundry items separately.

Heritage - Square and Rectangular Pipes and Fittings

Contents

Heritage square and rectangular pipes are available in 3 pipe sizes and 3 pipe lengths, together with a complete range of fittings. A spigot and socket system, which can be finished to replicate cast iron or with polyester powder coated using the raincote range on a BBA approved process. Complementary rainwater heads available to suit.

Notes:
Pipes and fittings are made using extruded section with welded-on cast sockets.
All dimensions are in mm unless shown otherwise.
Pipe sizes shown are nominal.

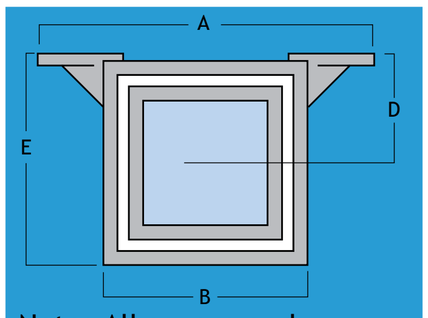

Note: All square and rectangular sockets are factory welded

Sockets (Nominal)	75 x 75	100 x 75	100 x 100
A - Length of flange overall	162	190	190
B - External width	90	122	122
C - Height of socket	82	85	85
D - Distance from centre line of pipe to wall	52	54	67
E - Distance from front of pipe to wall	98	102	130

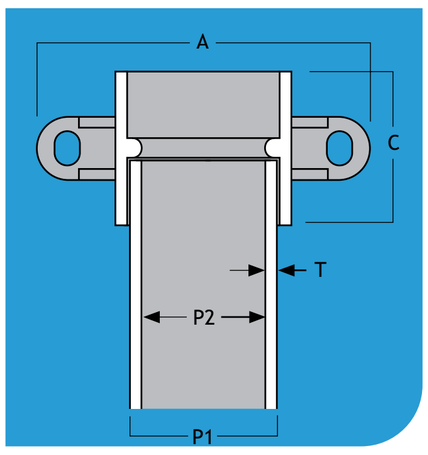

Pipes (Nominal)	75 x 75	100 x 75	100 x 100
P1 External Diameter	72 x 72	102 x 76	102 x 102
P2 Internal Diameter	68 x 68	98 x 72	97 x 97
T Thickness	2.0	2.0	2.5

Pipes - With and Without Ears

Note: The codes given below are for pipes with ears. For pipes without ears suffix codes with /NE

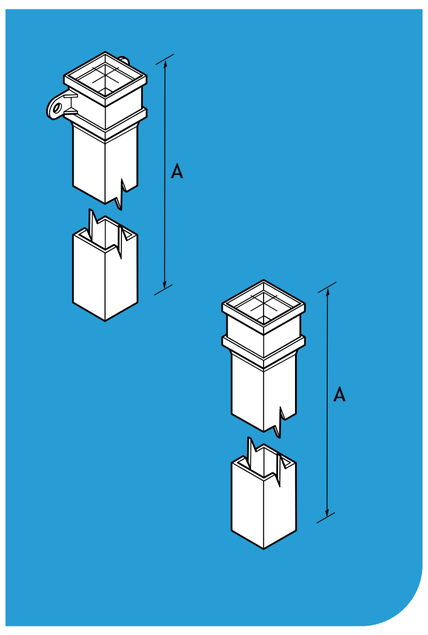

Pipe Size	A	Product Code
75 x 75 (3” x 3”)	3000	RW33/3MPPC
75 x 75 (3” x 3”)	2000	RW33/2MPPC
75 x 75 (3” x 3”)	1000	RW33/1MPPC
100 x 75 (4” x 3”)	3000	RW43/3MPPC
100 x 75 (4” x 3”)	2000	RW43/2MPPC
100 x 75 (4” x 3”)	1000	RW43/1MPPC
100 x 100 (4” x 4”)	3000	RW44/3MPPC
100 x 100 (4” x 4”)	2000	RW44/2MPPC
100 x 100 (4” x 4”)	1000	RW44/1MPPC

Note: The products are available in plain mill finish or polyester powder coated using a BBA approved process. Product codes in the tables refer to the powder coated finish. For mill finish please remove the suffix PPC. Sundry items are not included as standard unless otherwise stated. Please order sundry items separately.

Heritage - Square and Rectangular Pipes and Fittings - Cont.

Contents

Bends - Front and Back

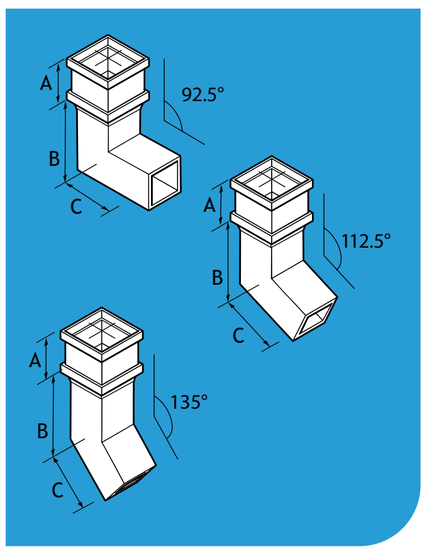

Pipe Size	Bend	A	B	C	Product Code
75 x 75 (3” x 3”)	92.5 Degree	82	67	137	RW33/B/92PPC
100 x 75 (4” x 3”)	92.5 Degree	85	80	150	RW43/FB/92PPC
100 x 100 (4” x 4”)	92.5 Degree	85	81	151	RW44/B/92PPC
75 x 75 (3” x 3”)	112.5 Degree	82	57	127	RW33/B/112PPC
100 x 75 (4” x 3”)	112.5 Degree	85	66	136	RW43/FB/112PPC
100 x 100 (4” x 4”)	112.5 Degree	85	66	136	RW44/B/112PPC
75 x 75 (3” x 3”)	135 Degree	82	47	117	RW33/B/135PPC
100 x 75 (4” x 3”)	135 Degree	85	58	128	RW43/FB/135PPC
100 x 100 (4” x 4”)	135 Degree	85	53	123	RW44/B/135PPC

Bends - Left and Right

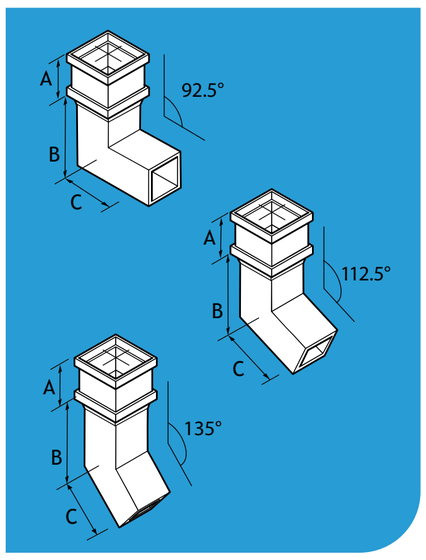

Pipe Size	Bend	A	B	C	Product Code
75 x 75 (3” x 3”)	92.5 Degree	82	67	137	RW33/B/92PPC
100 x 75 (4” x 3”)	92.5 Degree	85	80	150	RW43/FB/92PPC
100 x 100 (4” x 4”)	92.5 Degree	85	81	151	RW44/B/92PPC
75 x 75 (3” x 3”)	112.5 Degree	82	57	127	RW33/B/112PPC
100 x 75 (4” x 3”)	112.5 Degree	85	66	136	RW43/FB/112PPC
100 x 100 (4” x 4”)	112.5 Degree	85	66	136	RW44/B/112PPC
75 x 75 (3” x 3”)	135 Degree	82	47	117	RW33/B/135PPC
100 x 75 (4” x 3”)	135 Degree	85	58	128	RW43/FB/135PPC
100 x 100 (4” x 4”)	135 Degree	85	53	123	RW44/B/135PPC

Branches - Left and Right

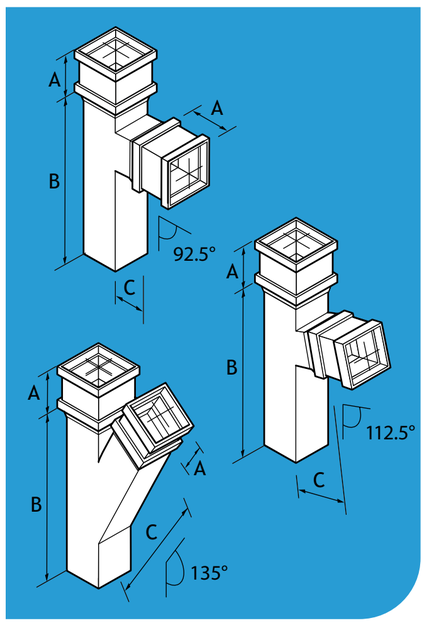

Pipe Size	Bend	A	B	C	Product Code
75 x 75 (3” x 3”)	92.5 Degree	82	230	85	RW33/BR/92PPC
100 x 75 (4” x 3”)	92.5 Degree	85	230	85	RW43/SBR/92PPC
100 x 100 (4” x 4”)	92.5 Degree	85	230	85	RW44/BR/92PPC
75 x 75 (3” x 3”)	112.5 Degree	82	248	118	RW33/BR/112PPC
100 x 75 (4” x 3”)	112.5 Degree	85	248	118	RW43/SBR/112PPC
100 x 100 (4” x 4”)	112.5 Degree	85	248	118	RW44/BR/112PPC
75 x 75 (3” x 3”)	135 Degree	82	310	190	RW33/BR/135PPC
100 x 75 (4” x 3”)	135 Degree	85	310	190	RW43/SBR/135PPC
100 x 100 (4” x 4”)	135 Degree	85	310	190	RW44/BR/135PPC

Square Pipe Sockets

Note: The codes given below are for sockets with ears. For sockets without ears suffix codes with /NE

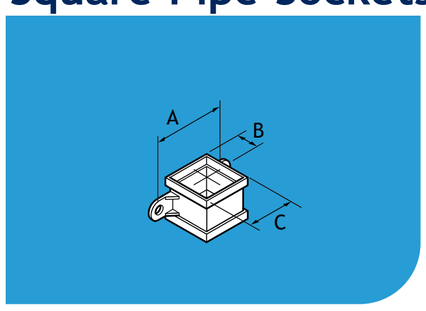

Pipe Size	A	B	C	Product Code
75 x 75 (3” x 3”)	162	52	90	RW33/PSPPC
100 x 75 (4” x 3”)	191	54	122	RW43/PSPPC
100 x 100 (4” x 4”)	191	67	122	RW44/PSPPC

Access Pipes

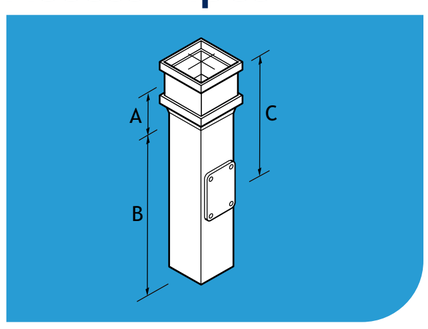

Pipe Size	A	B	C	Product Code
75 x 75 (3” x 3”)	82	266	153	RW33/ACPPPC
100 x 75 (4” x 3”)	82	266	153	RW43/ACPPPC
100 x 100 (4” x 4”)	82	266	153	RW44/ACPPPC

Note: The products are available in plain mill finish or polyester powder coated using a BBA approved process. Product codes in the tables refer to the powder coated finish. For mill finish please remove the suffix PPC. Sundry items are not included as standard unless otherwise stated. Please order sundry items separately.

Heritage - Square and Rectangular Pipes and Fittings - Cont.

112.5° One Part Offsets

Note: Alternative angles, e.g. 135° plinth offsets with ears are also available to order

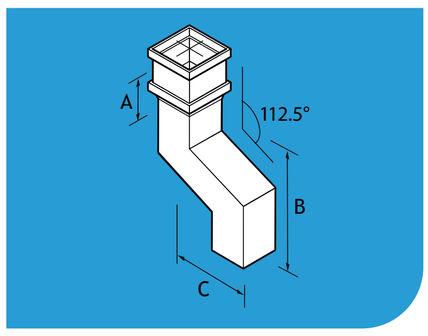

Pipe Size	Offset	A	B	C	Product Code
75 x 75 (3” x 3”)	75 (3”)	82	220	76	RW33/PO/3PPC
100 x 75 (4” x 3”)	75 (3”)	82	220	76	RW43/PO/3PPC
100 x 100 (4” x 4”)	75 (3”)	82	220	76	RW44/PO/3PPC

112.5° Two Part Offsets

*The order code for 112.5° side offsets should be suffixed with /L for left hand or /R for right hand discharge

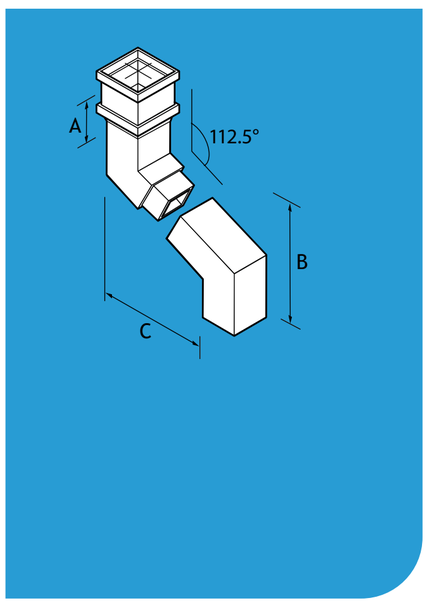

Pipe Size	Offset	A	B	C	MAX	MIN	Product Code
75 x 75 (3” x 3”)	300 (12”)	82	310	305	310	110	RW33/AO/12PPC
75 x 75 (3” x 3”)	525 (21”)	82	390	533	525	110	RW33/AO/21PPC
75 x 75 (3” x 3”)	750 (30”)	82	470	762	760	110	RW33/AO/30/PPC
100 x 75 (4” x 3”)	300 (12”)	82	310	305	310	110	RW43/AO/12PPC*
100 x 75 (4” x 3”)	525 (21”)	82	390	533	525	110	RW43/AO/21PPC*
100 x 75 (4” x 3”)	750 (30”)	82	470	762	760	110	RW43/AO/30/PPC*
100 x 100 (4” x 4”)	300 (12”)	82	345	305	310	135	RW44/AO/12PPC
100 x 100 (4” x 4”)	525 (21”)	82	439	533	525	135	RW44/AO/21PPC
100 x 100 (4” x 4”)	750 (30”)	82	534	762	760	135	RW44/AO/30/PPC

Shoes Front with Ears

Note: The codes given above are for shoes with ears. For shoes without ears add suffix /NE

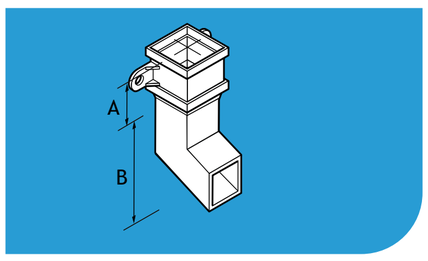

Pipe Size	A	B	Product Code
75 x 75 (3” x 3”)	82	106	RW33/SHPPC
100 x 75 (4” x 3”)	82	106	RW43/SHPPC
100 x 100 (4” x 4”)	82	148	RW44/SHPPC

Standard Base Clips

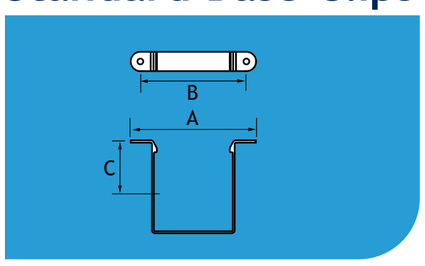

Pipe Size	A	B	C	Product Code
75 x 75 (3” x 3”)	134	109	52	RW33/PCPPC
100 x 75 (4” x 3”)	163	138	54	RW43/PCPPC
100 x 100 (4” x 4”)	163	138	67	RW44/PCPPC

Extended Base Clips

Note: Dimension C can be altered to suit as it can be cut down on site.

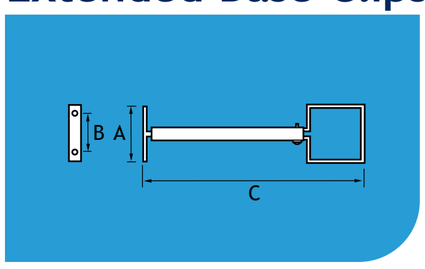

Pipe Size	A	B	C	Product Code
75 x 75 (3” x 3”)	87	47	290 max	RW33/EX/PCPPC
100 x 75 (4” x 3”)	87	47	292 max	RW43/EX/PCPPC
100 x 100 (4” x 4”)	87	47	305 max	RW44/EX/PCPPC

Small Base Clips

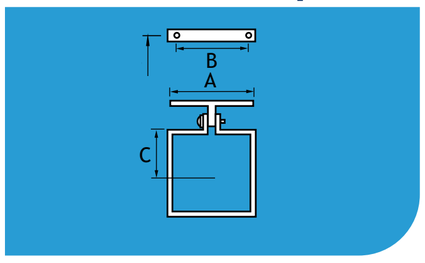

Pipe Size	A	B	C	Product Code
75 x 75 (3” x 3”)	87	47	78	RW33/SB/PCPPC
100 x 75 (4” x 3”)	87	47	80	RW43/SB/PCPPC
100 x 100 (4” x 4”)	87	47	94	RW44/SB/PCPPC

Note: The products are available in plain mill finish or polyester powder coated using a BBA approved process. Product codes in the tables refer to the powder coated finish. For mill finish please remove the suffix PPC. Sundry items are not included as standard unless otherwise stated. Please order sundry items separately.

Heritage - Hopper Heads

Contents

Flat Back (Curved Edge)

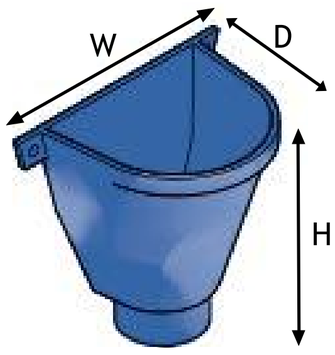

Pipe Size	W	D	H	Product Code
63mm Ø	190	170	180	RW1/72PPC
75mm Ø	190	170	180	RW2/86PPC
100mm Ø	190	170	180	RW3/131PPC

BESPOKE CODE NEEDED WHEN USING SMALL BASE CLIPS

Flat Back (Fluted Edge)

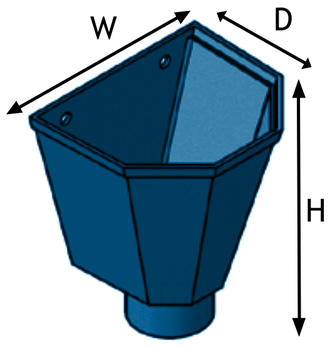

Pipe Size	W	D	H	Product Code
63mm Ø	200	170	170	RW1/HOP/FBPPC
75mm Ø	200	170	170	RW2/HOP/FBPPC

BESPOKE CODE NEEDED WHEN USING SMALL BASE CLIPS

Rectangular

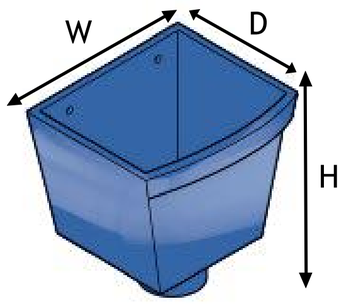

Pipe Size	W	D	H	Product Code
63mm Ø	260	190	180	RW1/111PPC
75mm Ø	260	190	180	RW2/112PPC
100mm Ø	260	190	180	RW3/113PPC

BESPOKE CODE NEEDED WHEN USING SMALL BASE CLIPS

Ornamental

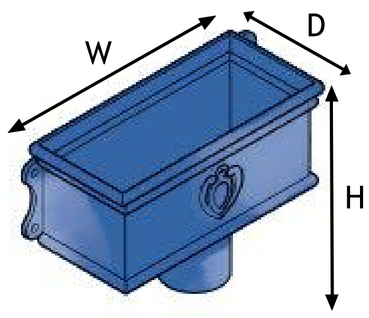

Pipe Size	W	D	H	Product Code
63mm Ø	410	190	180	RWOH/25PPC
75mm Ø	410	190	180	RWOH/30PPC
100mm Ø	410	190	180	RWOH/40PPC

BESPOKE CODE NEEDED WHEN USING SMALL BASE CLIPS

Berkeley

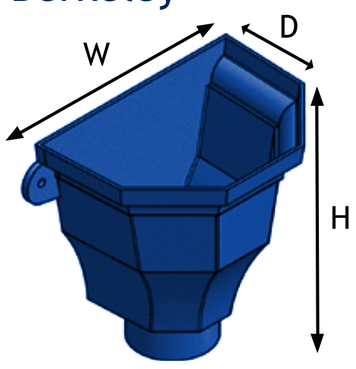

Pipe Size	W	D	H	Product Code
63mm Ø	315	200	230	RW1/HOP/BPPC
75mm Ø	315	200	230	RW2/HOP/BPPC
100mm Ø	315	200	230	RW3/HOP/BPPC

BESPOKE CODE NEEDED WHEN USING SMALL BASE CLIPS

Chatsworth (with Motif)

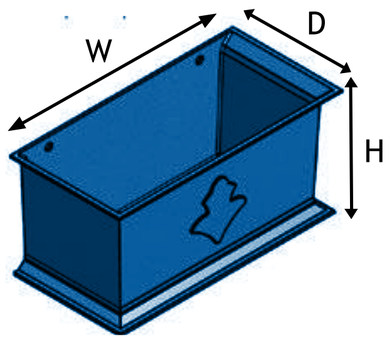

Pipe Size	W	D	H	Product Code
63mm Ø	380	190	180	RW1/HOP/CMPPC
75mm Ø	380	190	180	RW2/HOP/CMPPC
100mm Ø	380	190	180	RW3/HOP/CMPPC

BESPOKE CODE NEEDED WHEN USING SMALL BASE CLIPS

Note: The products are available in plain mill finish or polyester powder coated using a BBA approved process. Product codes in the tables refer to the powder coated finish. For mill finish please remove the suffix PPC. Sundry items are not included as standard unless otherwise stated. Please order sundry items separately.

Heritage - Hopper Heads - Cont.

Contents

Chatsworth (without Motif)

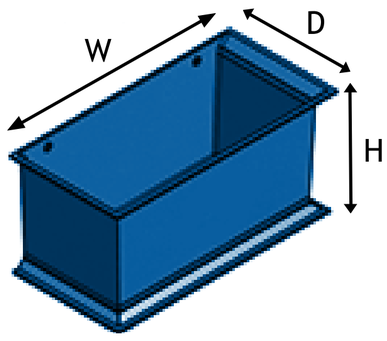

Pipe Size	W	D	H	Product Code
63mm Ø	380	190	180	RW1/HOP/CPPC
75mm Ø	380	190	180	RW2/HOP/CPPC
100mm Ø	380	190	180	RW3/HOP/CPPC

Rectangular Hopper Head

NOTE: DESIGNED TO FIT HERITAGE SOCKETED ALUMINIUM PIPES. ADD SUFFIX /F TO PRODUCT CODE TO FIT FLUSHJOINT OR GUARDIAN PIPES

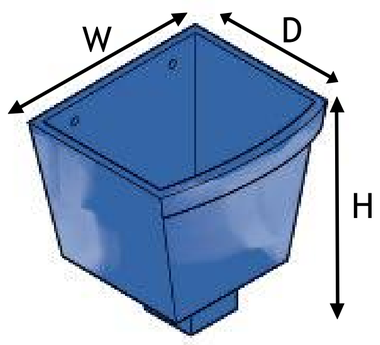

Pipe Size	W	D	H	Product Code
75 x 75mm	260	190	180	RW33/RHPPC
100 x 75mm	260	190	180	RW43/RHPPC
100 x 100mm	260	190	180	RW44/RHPPC

BESPOKE CODE NEEDED WHEN USING SMALL BASE CLIPS

Ornamental Hopper Head

NOTE: DESIGNED TO FIT HERITAGE SOCKETED ALUMINIUM PIPES. ADD SUFFIX /F TO PRODUCT CODE TO FIT FLUSHJOINT OR GUARDIAN PIPES

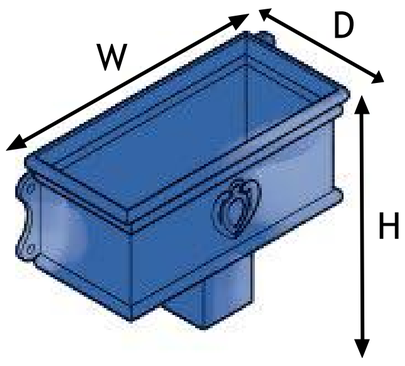

Pipe Size	W	D	H	Product Code
75 x 75mm	410	190	180	RWOH/33PPC
100 x 75mm	410	190	180	RWOH/43PPC
100 x 100mm	410	190	180	RWOH/44PPC

BESPOKE CODE NEEDED WHEN USING SMALL BASE CLIPS

Berkeley Hopper Head

NOTE: DESIGNED TO FIT HERITAGE SOCKETED ALUMINIUM PIPES. ADD SUFFIX /F TO PRODUCT CODE TO FIT FLUSHJOINT OR GUARDIAN PIPES

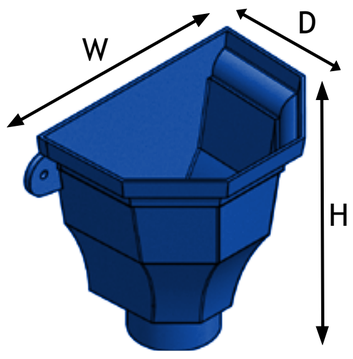

Pipe Size	W	D	H	Product Code
75 x 75mm	315	200	230	RW33/HOP/BPPC
100 x 75mm	315	200	230	RW43/HOP/BPPC
100 x 100mm	315	200	230	RW44/HOP/BPPC

BESPOKE CODE NEEDED WHEN USING SMALL BASE CLIPS

Chatsworth Hopper Head (with Motif)

NOTE: DESIGNED TO FIT HERITAGE SOCKETED ALUMINIUM PIPES. ADD SUFFIX /F TO PRODUCT CODE TO FIT FLUSHJOINT OR GUARDIAN PIPES

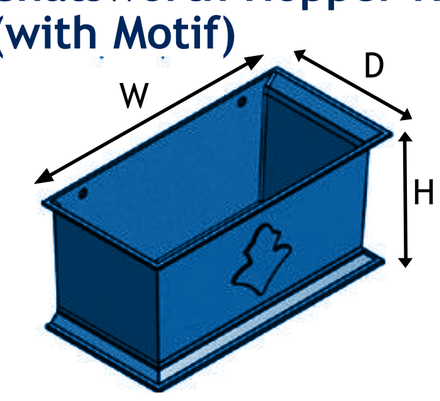

Pipe Size	W	D	H	Product Code
75 x 75mm	380	190	180	RW33/HOP/CMPPC
100 x 75mm	380	190	180	RW43/HOP/CMPPC
100 x 100mm	380	190	180	RW44/HOP/CMPPC

BESPOKE CODE NEEDED WHEN USING SMALL BASE CLIPS

Chatsworth Hopper Head (without Motif)

NOTE: DESIGNED TO FIT HERITAGE SOCKETED ALUMINIUM PIPES. ADD SUFFIX /F TO PRODUCT CODE TO FIT FLUSHJOINT OR GUARDIAN PIPES

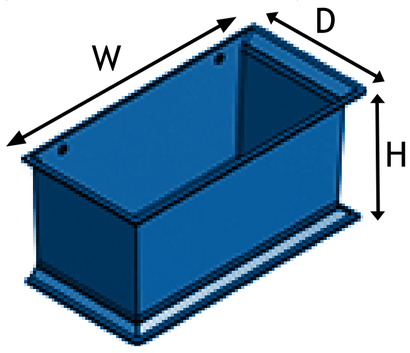

Pipe Size	W	D	H	Product Code
75 x 75mm	380	190	180	RW33/HOP/CPPC
100 x 75mm	380	190	180	RW43/HOP/CPPC
100 x 100mm	380	190	180	RW44/HOP/CPPC

BESPOKE CODE NEEDED WHEN USING SMALL BASE CLIPS

Note: The products are available in plain mill finish or polyester powder coated using a BBA approved process. Product codes in the tables refer to the powder coated finish. For mill finish please remove the suffix PPC. Sundry items are not included as standard unless otherwise stated. Please order sundry items separately.

Sundry Items

Touch Up Paint

RAL 1011m Brown Beige
RAL 1013m Pearl White
RAL 1021m Cadmium Yellow
RAL 2002m Vermilion
RAL 3003m Ruby Red
RAL 3005m Wine Red
RAL 5003m Sapphire Blue
RAL 5010m Flower Blue
RAL 6005m Moss Green
RAL 6018m Yellow Green
RAL 7005m Mouse Grey
RAL 7006m Beige Grey
RAL 7012m * Basalt Grey
RAL 7015m * Slate Grey
RAL 7016m * Anthracite Grey
RAL 7024m Graphite Grey
RAL 7036m Platinum Grey
RAL 7037m * Dusty Grey
RAL 7038m Agate Grey
RAL 8017m Chocolate Brown
RAL 8019m Grey Brown
RAL 9006g Metallic Silver (80% Gloss)
RAL 9006m Metallic Silver
RAL 9016m * White
RAL 9017m Black (60% Gloss)
Textured Black

Lightning Link

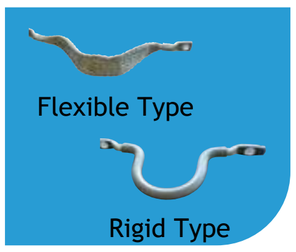

Type	Product Code
Flexible Flat Braid Assembly	LL635007
Rigid Type Assembly	LL632914
Oxide Inhibitor Compound	LL991972

Note: Provides an earth continuity bond intended for connection across joints on-site thereby providing electrical continuity throughout the entire metal gutter system. Extra pre-drilled fixing holes in gutter and fittings can be provided

Gutter Dry Joint System

Type	Product Code
TPE Sealing strips	MET001

Note: Only suitable for Half Round Heritage

Solvent Cleaner

Type	Product Code
Fast Drying Solvent Cleaner	SC991281

Backing Foam

Type	Product Code
10m Roll x 6mm dia Backing Foam	BF991408

Silicone Sealant

Type	Colour	Size	Product Code
Dow Corning	White	310ml	SS991558
Dow Corning	Grey	310ml	SS991559
Dow Corning	Bronze	310ml	SS991560
Dow Corning	Black	310ml	SS991561
Dow Corning	Limestone	310ml	SS991562
Translucent Silicone	Translucent	310ml	SS991563

Gutter Bolts (Nut, Bolt & Washer)

Type	Size	Notes	Product Code
Aluminium Nut/Bolt/Washer	M6 x 12mm	For use with the GX Gutter Range	NBW630308
Aluminium Nut/Bolt/Washer	M6 x 20mm	For use with the Heritage Gutter Range	NBW630307

Woodscrew

Note: Manufactured from bright zinc plated yellow passivated mild steel

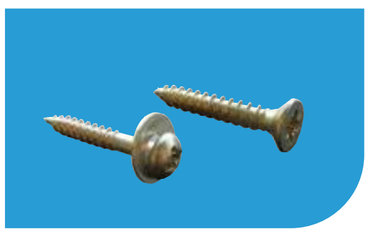

Type	Size	Notes	Product Code
Countersunk	No.12 x 1.5”	To fix rafter arms to GX Brackets	ZNBW969041
Roundhead	No.12 x 1.5”	To fix Heritage Fascia Brackets /‘direct fix’ Gutter range	NBW630362
Roundhead	No.12 x 2”	To fix pipe sockets with ears or pipe clips	NBW630361

Alumasc Rainwater Systems

The Contemporary Aluminium Range

This premium, high performance rainwater range features the Aqualine and AX extruded aluminium gutter systems, GX pressed aluminium gutter system, Flushjoint extruded aluminium pipe system, Swaged Aluminum pipe system and Guardian extruded Aluminium security pipe system.

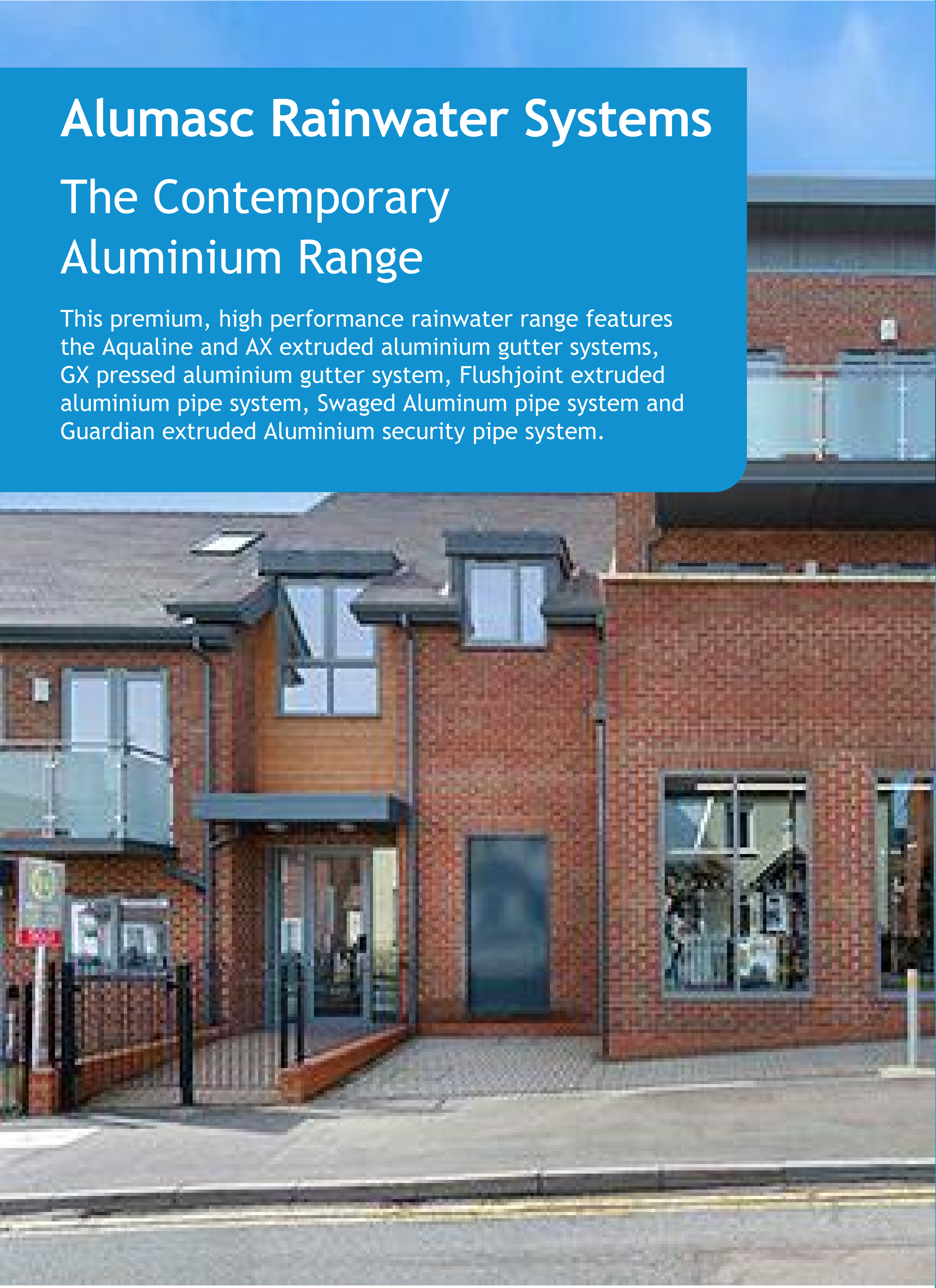

Aluminium Rainwater Systems - Product Selector

Aqualine Gutters

A range of contemporary extruded aluminium gutter profiles in five styles, each in a choice of sizes. Complete with innovative secret-fix brackets.

AX SnapFix Gutters

An economical range of extruded aluminium gutter sections designed for traditional wet jointing on site. AX gutters are available in 3 profiles and a choice of sizes – ideal where a high capacity gutter system is required.

GX Gutters

A range of contemporary pressed aluminium gutter profiles, in three styles, for traditional wet jointing on site. Suited for applications where maximum capacity gutters are required.

Flushjoint Downpipes

A range of contemporary extruded aluminium downpipes, round, square and rectangular, with concealed spigots. High impact resistance.

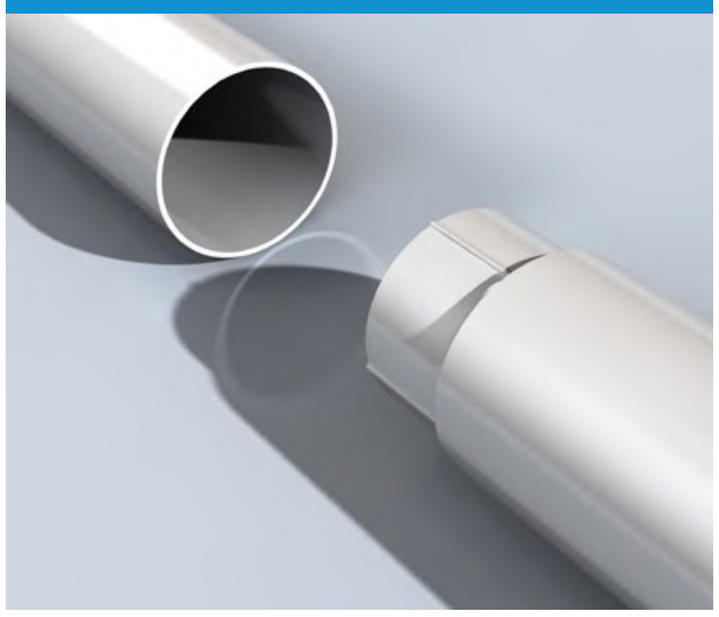

Swaged Downpipes

An economical metal downpipe system with circular pipes available in a choice of three diameters.

Guardian Downpipes

A range of contemporary extruded aluminium security downpipes designed for mounting flush with the building fabric. The downpipes have concealed brackets and concealed jointing.

Aluminium Rainwater Systems - Overview of finishes

Alumasc Aluminium Rainwater Systems are available in plain mill finish or polyester powder coated using the raincote range on a BBA approved process. The standard aluminium RAL colour range includes 26 colours to choose from. The standard range of colours are produced with a 30% gloss finish unless otherwise stated.

Traditional & Contemporary Aluminium Rainwater Systems: In-House Powder Coatings

Alumasc's in-house powder coating plant gives both the control and the freedom to produce a range of colour finishes to a level not t ypically available in the construction industry. Utilising the technologies and procedures adopted for its automotive precision castings division, Alumasc benefits from high specification coating techniques that fulfil the rigors of testing prescribed by some of the worlds leading vehicle producers. Finishes of this quality maintain their appearance even when subject to harsh geographical weather conditions.

The aluminium undergoes a series of pretreatments to provide the ideal prepared surface to receive an electrostatically applied polyester powder in the chosen colour. This is then 'baked' and bonded to the fitting in a carefully controlled oven; the complete process is achieved on a continuous line to obtain the best results. The performance of polyester powder coated rainwater systems greatly exceeds that of site painted systems.

Approvals & Quality Control

Polyester powder coating is in accordance with BS EN 12206-1:2004. This refers to the coating of aluminium and aluminium alloys for architectural purposes. In the case of rainwater systems it is accepted that such coating is both decorative and protective. Alumasc systems will certainly be finished to this standard, and will in most cases exceed it.

Along with independent auditing to the ISO 9001:2008 Quality Management Standard, Alumasc maintains BBA certification for the powder coating of its aluminium rainwater goods in respect of longevity of performance and colour fastness - British Board of Agrément Certificate No. 86/1671.

RAL 1011m Brown Beige	RAL 1013m Pearl White	RAL 1021m Cadmium Yellow	RAL 2002m Vermilion
RAL 3003m Ruby Red	RAL 3005m Wine Red	RAL 5003m Sapphire Blue	RAL 5010m Flower Blue
RAL 6005m Moss Green	RAL 6018m Yellow Green	RAL 7005m Mouse Grey	RAL 7006m Beige Grey
RAL 7012m * Basalt Grey	RAL 7015m * Slate Grey	RAL 7016m * Anthracite Grey	RAL 7024m Graphite Grey
RAL 7036m Platinum Grey	RAL 7037m * Dusty Grey	RAL 7038m Agate Grey	RAL 8017m Chocolate Brown
RAL 8019m Grey Brown	RAL 9006g Metallic Silver (80% Gloss)	RAL 9006m Metallic Silver	RAL 9016m * White
Textured Black	RAL 9017m Black (60% Gloss)		

Colours are reproduced for general guidance only. For exact colour and finish references, please contact Alumasc for colour swatch samples and for further information.

* Also Available in a textured finish

BBA APPROVAL INSPECTION TESTING CERTIFICATION
CERTIFICATE No.86/1671

"We can match any BS or RAL colour of your choice"

Aqualine - Extruded Gutter - Product Summary

Aqualine provides a compact and efficient rainwater system that significantly enhances and complements the appearance and architectural character of the building. A choice of 5 standard profiles is available with secret fix bracketry and all weather 'dry' jointing, with full provision for thermal movement.

Aqualine - Half Round Gutter

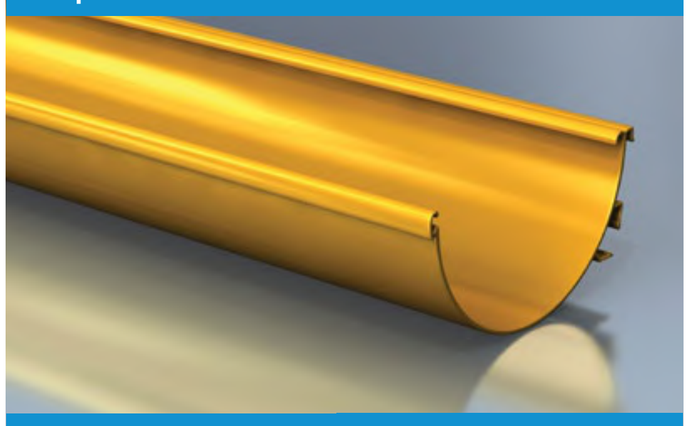

100 x 50mm
120 x 60mm
150 x 75mm

Aqualine - Deep Run Gutter

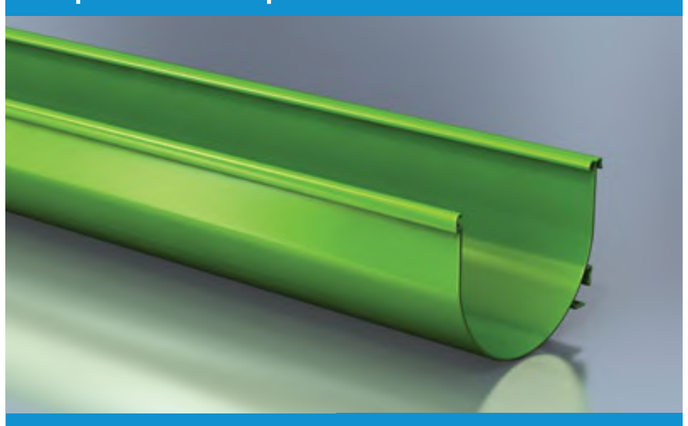

110 x 85mm

Aqualine - Modern Gutter

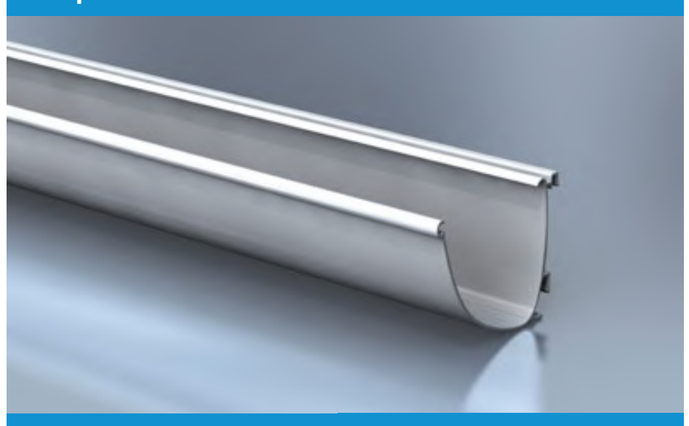

100 x 85mm
150 x 120mm

Aqualine - Half Round Gutter

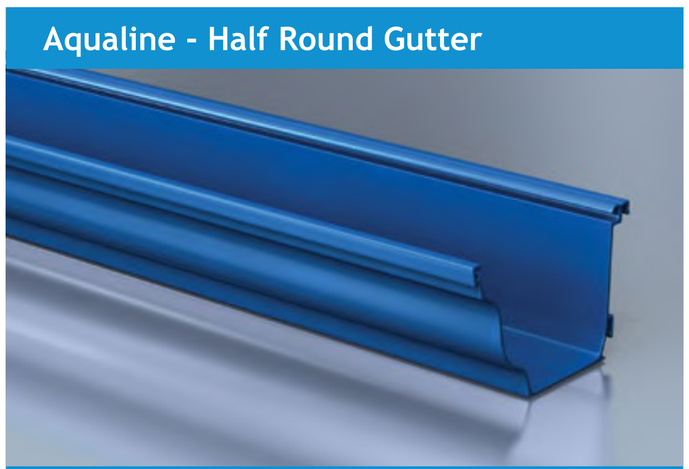

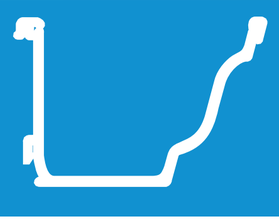

140 x 100mm
160 x 100mm

Aqualine - Box Gutter

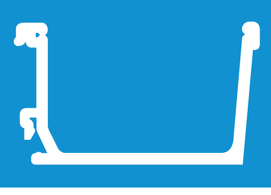

120 x 80mm
140 x 100mm
160 x 100mm

Applications

- Provides smooth lines and intricate detailing to contemporary designed buildings.
- High flow capacity for enhanced performance.
- Suited to both flush and projecting eaves applications.
- Can use any combination of aluminium gutter and aluminium downpipe ranges together.

Features & Performance

- 5 gutter profiles available in 3 metre lengths, in a choice of sizes.
- Designed to fully accommodate thermal movement at every joint.
- Lightweight, durable and non-corrodible.
- Life expectancy of aluminium: 40 years (rural/suburban areas); up to 25 years (industrial/marine areas when using a marine grade coating).
- Easy to handle and fix.
- Aqualine is patented and is also 'Design Registered'.
- Aluminium is 100% recyclable.

Manufacture

- UK manufactured.
- Based on aluminium extrusions to BS 1474: 1972, material 6063, T6.

Installation & Fixing

- Concealed site fixing and jointing for a clean external appearance.
- Once support brackets have been fixed to the building fabric all remaining assembly is by simple clip fix.
- Joints are dry sealed using internal unions secured by sliding lock bars.
- Minimal maintenance requirements.

Aqualine - Half Round Gutters and Fittings

Contents

Aqualine Half Round Gutters are available in 3 sizes and in standard 3m gutter lengths, together with a complete range of fittings. A contemporary profile with clean lines that fits well into virtually any design aesthetic. Polyester powder coated using the raincote range on a BBA approved process.

Notes:
All dimensions are in mm unless shown otherwise.
Gutter sizes shown are nominal.
T = Gutter Thickness (nominal)

Gutter Assemblies

Gutter Assemblies are complete 3 metre assemblies including Gutter Length, Union Clips, Brackets & Slide locks

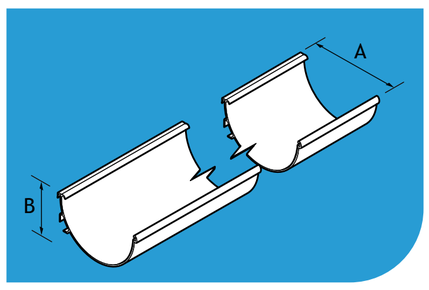

Gutter Size	Gutter Length	A	B	T	Product Code
100 x 50	3000	117	60	3	EHR10/3MAPPC
120 x 60	3000	140	70	3	EHR12/3MAPPC
150 x 75	3000	170	85	3	EHR15/3MAPPC

Union Clip Assemblies

Note: Union Clip Assemblies include Union Clips and Slide Locks

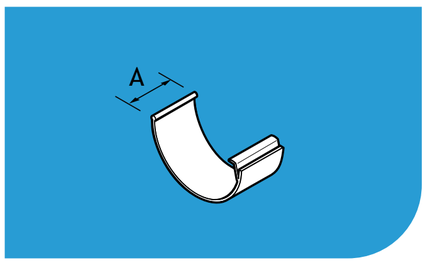

Gutter Size	A	Product Code
100 x 50	76	EHR10/UCAPPC
120 x 60	76	EHR12/UCAPPC
150 x 75	76	EHR15/UCAPPC

Brackets

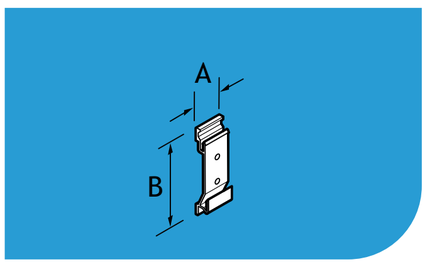

Gutter Size	A	B	Product Code
100 x 50	40	70	EHR10/FBPPC
120 x 60	40	70	EHR12/FBPPC
150 x 75	40	80	EHR15/FBPPC

90° Angle Assemblies

Note: Angle Assemblies include Union Clips and Slide Locks

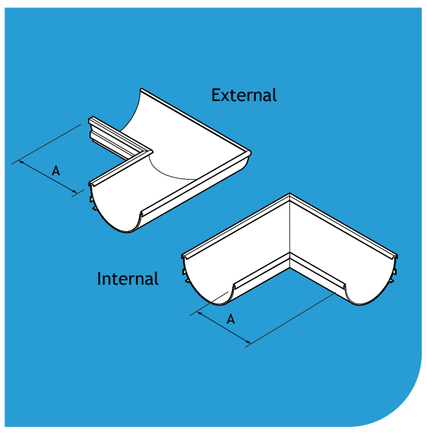

Gutter Size	Type	A	Product Code
100 x 50	External	200	EHR10/EA90APPC
120 x 60	External	200	EHR12/EA90APPC
150 x 75	External	200	EHR15/EA90APPC
100 x 50	Internal	200	EHR10/IA90APPC
120 x 60	Internal	200	EHR12/IA90APPC
150 x 75	Internal	200	EHR15/IA90APPC

Note: The products are available in plain mill finish or polyester powder coated using a BBA approved process. Product codes in the tables refer to the powder coated finish. For mill finish please remove the suffix PPC. Sundry items are not included as standard unless otherwise stated. Please order sundry items separately.

135° Angle Assemblies

Note: Angle Assemblies include Union Clips and Slide Locks

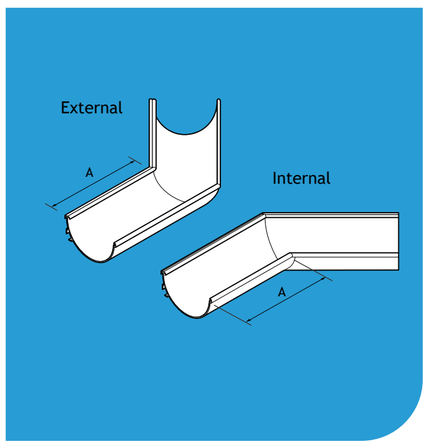

Gutter Size	Type	A	Product Code
100 x 50	External	200	EHR10/EA13APPC
120 x 60	External	200	EHR12/EA13APPC
150 x 75	External	200	EHR15/EA13APPC
100 x 50	Internal	200	EHR10/IA13APPC
120 x 60	Internal	200	EHR12/IA13APPC
150 x 75	Internal	200	EHR15/IA13APPC

Running Outlet Assemblies

Note: A choice of three pipe systems is available. Product codes above denote that running outlets fit to Heritage socketed aluminium pipes. ADD SUFFIX /F TO PRODUCT CODE TO FIT FLUSHJOINT OR GUARDIAN PIPES

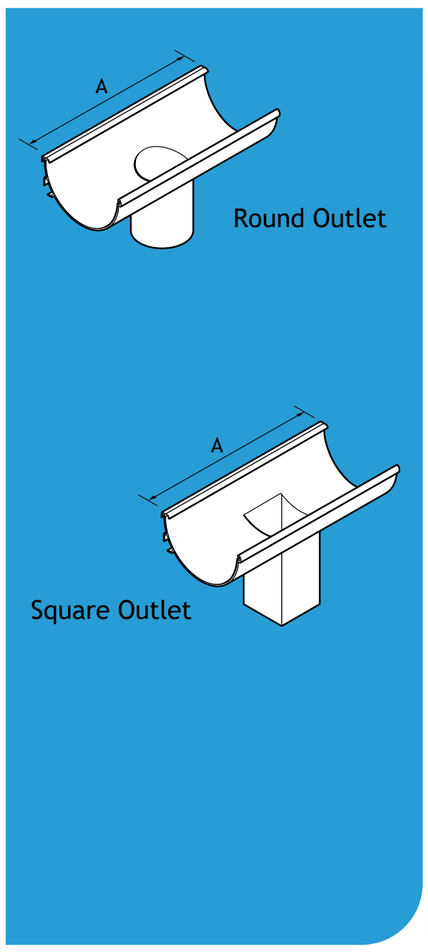

Gutter Size	Pipe Size	A	Product Code
100 x 50	63	300	EHR10/RO25APPC
120 x 60	63	300	EHR12/RO25APPC
150 x 75	63	300	EHR15/RO25APPC
100 x 50	75	300	EHR10/RO30APPC
120 x 60	75	300	EHR12/RO30APPC
150 x 75	75	300	EHR15/RO30APPC
100 x 75	100	300	EHR15/RO40APPC
100 x 50	75 x 75	300	EHR10/SO33APPC
120 x 60	75 x 75	300	EHR12/SO33APPC
150 x 75	75 x 75	300	EHR15/SO33APPC
100 x 50	100 x 75	300	EHR10/SO43APPC
120 x 60	100 x 75	300	EHR12/SO43APPC
150 x 75	100 x 75	300	EHR15/SO43APPC
100 x 75	100 x 100	300	EHR15/SO44APPC

Stop-End Assemblies

Note: Stop-End Assemblies include Union Clips and Slide Locks

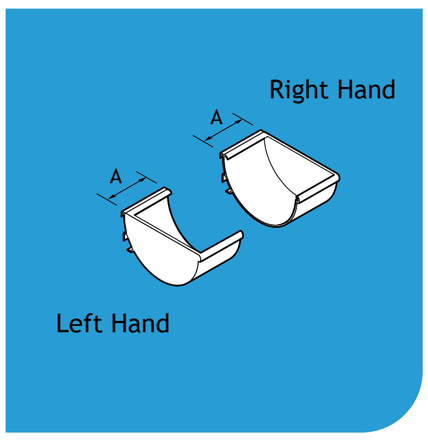

Gutter Size	Type	A	Product Code
100 x 50	Left Hand	50	EHR10/SELHAPPC
120 x 60	Left Hand	50	EHR12/SELHAPPC
150 x 75	Left Hand	50	EHR15/SELHAPPC
100 x 50	Right Hand	50	EHR10/SERHAPPC
120 x 60	Right Hand	50	EHR12/SERHAPPC
150 x 75	Right Hand	50	EHR15/SERHAPPC

Starter Pack (required with each order)

Includes:

P80 joint/seal lubricant.
2 x jointing tool.
10 x spare lock bars.
20 x spare No 12 screws.
8 x spare seal strips.
20 x shims.

Gutter Size	Product Code
100 x 50	EHR10/START
120 x 60	EHR12/START
150 x 75	EHR15/START

Note: The products are available in plain mill finish or polyester powder coated using a BBA approved process. Product codes in the tables refer to the powder coated finish. For mill finish please remove the suffix PPC. Sundry items are not included as standard unless otherwise stated. Please order sundry items separately.

Aqualine - Deep Run Gutters & Fittings

Contents

Aqualine Deep Run Gutters combine the clean lines of a modern half round gutter with high capacity and extra performance. Available in 1 size and in standard 3m gutter lengths, together with a complete range of fittings. Polyester powder coated using the raincote range on a BBA approved process.

Notes: All dimensions are in mm unless shown otherwise.
Gutter sizes shown are nominal.
Gutter Assemblies are complete 3 metre assemblies including gutter length, union clips, brackets & slide locks
T = Gutter thickness (nominal)

Gutter Assemblies

Note: Gutter Assemblies are supplied with Union Clips and Brackets included. The codes in the table are for additional items, ordered as extras.

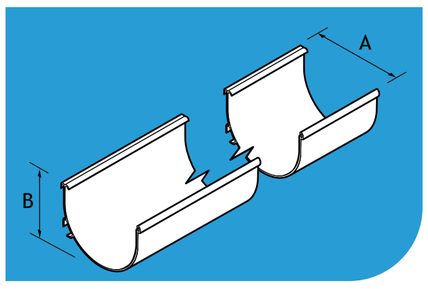

Gutter Size	Gutter Length	A	B	T	Product Code
110 x 85	3000	137	88	3	EDR11/3MAPPC

Union Clip Assemblies

Note: Union Clip Assemblies include Union Clips and Slide Locks

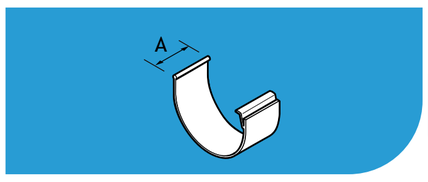

Gutter Size	A	Product Code
110 x 85	76	EDR11/3MAPPC

Brackets

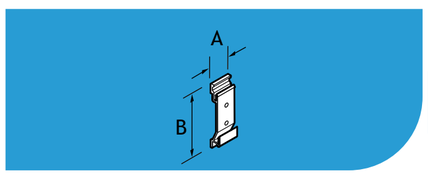

Gutter Size	A	B	Product Code
110 x 85	40	80	EDR11/FBPPC

90º Angle Assemblies

Note: Angle Assemblies include Union Clips and Slide Locks

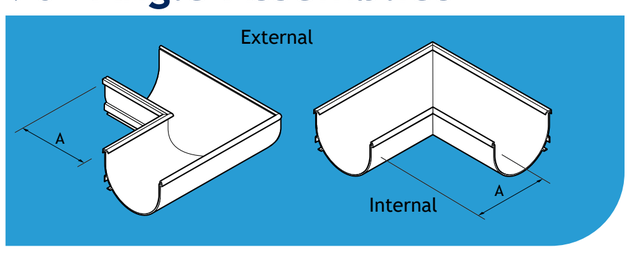

Gutter Size	Type	A	Product Code
110 x 85	External	200	EDR11/EA90APPC
110 x 85	Internal	200	EDR11/IA90APPC

135º Angle Assemblies

Note: Angle Assemblies include Union Clips and Slide Locks

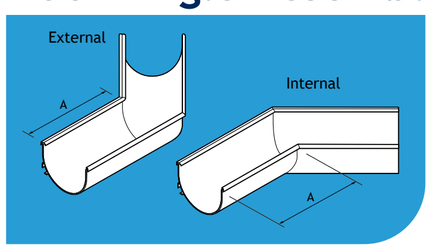

Gutter Size	Type	A	Product Code
110 x 85	External	200	EDR11/EA13APPC
110 x 85	Internal	200	EDR11/IA13APPC

Running Outlet Assemblies

Note: A choice of three pipe systems is available. Product codes above denote that running outlets fit to Heritage socketed aluminium pipes. ADD SUFFIX /F TO PRODUCT CODE TO FIT FLUSHJOINT OR GUARDIAN PIPES

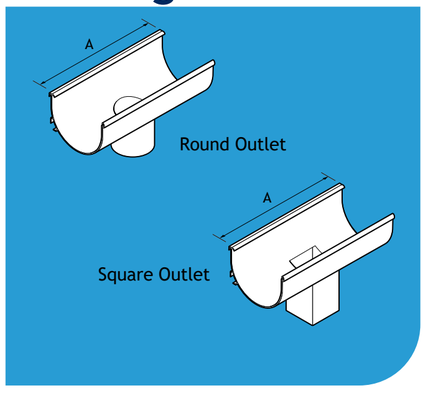

Gutter Size	Pipe Size	A	Product Code
110 x 85	63	300	EDR11/RO25APPC
110 x 85	75	300	EDR11/RO30APPC
110 x 85	100	300	EDR11/RO40APPC
110 x 85	75 x 75	300	EDR11/SO33APPC
110 x 85	100 x 75	300	EDR11/SO43APPC
110 x 85	100 x 100	300	EDR11/SO44APPC

Note: The products are available in plain mill finish or polyester powder coated using a BBA approved process. Product codes in the tables refer to the powder coated finish. For mill finish please remove the suffix PPC. Sundry items are not included as standard unless otherwise stated. Please order sundry items separately.

Aqualine - Modern Gutters & Fittings

Contents

Aqualine Modern Gutters are available in 2 sizes and in standard 3m gutter lengths, together with a complete range of fittings. Sophisticated contemporary appearance for striking visual detail at the roofline. BBA approved polyester powder coated using the raincote range.

Notes:

All dimensions are in mm unless shown otherwise.
Gutter sizes shown are nominal.
Gutter Assemblies are complete 3 metre assemblies including Gutter Length, Union Clips, Brackets & Slide Locks
T = Gutter Thickness (nominal)

Gutter Assemblies

Note: Gutter Assemblies are supplied with Union Clips and Brackets included. The codes in the table are for additional items, ordered as extras.

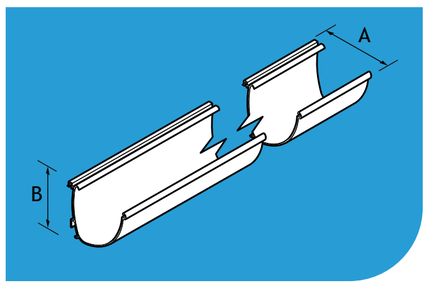

Gutter Size	Gutter Length	A	B	T	Product Code
100 x 85	3000	122	104	3	EAQ10/3MAPPC
150 x 120	3000	170	135	3	EAQ15/3MAPPC

Union Clip Assemblies

Note: Union Clip Assemblies include Union Clips and Slide Locks

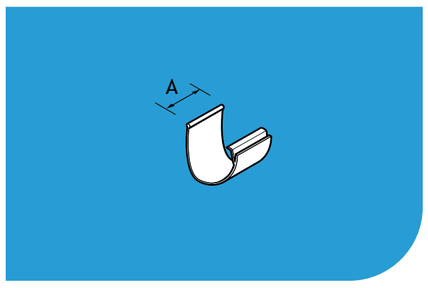

Gutter Size	Union Size	Product Code
100 x 85	76mm	EAQ10/UCA
150 x 150	76mm	EAQ15/UCA

Brackets

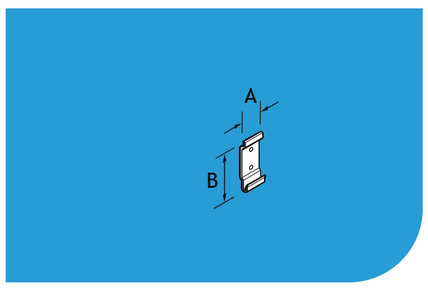

Gutter Size	A	B	Product Code
100 x 85	40	92	EAQ10/FBPPC
150 x 120	40	88	EAQ15/FBPPC

90° Angle Assemblies

Note: Angle Assemblies include Union Clips and Slide Locks

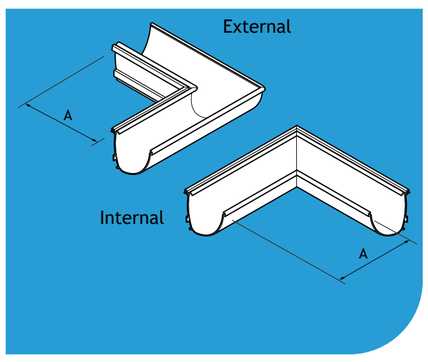

Gutter Size	Type	A	Product Code
100 x 85	External	200	EAQ10/EA90APPC
150 x 120	External	200	EAQ15/EA90APPC
100 x 85	Internal	200	EAQ10/IA90APPC
150 x 120	Internal	200	EAQ15/IA90APPC

Note: The products are available in plain mill finish or polyester powder coated using a BBA approved process. Product codes in the tables refer to the powder coated finish. For mill finish please remove the suffix PPC. Sundry items are not included as standard unless otherwise stated. Please order sundry items separately.

Contents

135° Angle Assemblies

Note: Angle Assemblies include Union Clips and Slide Locks

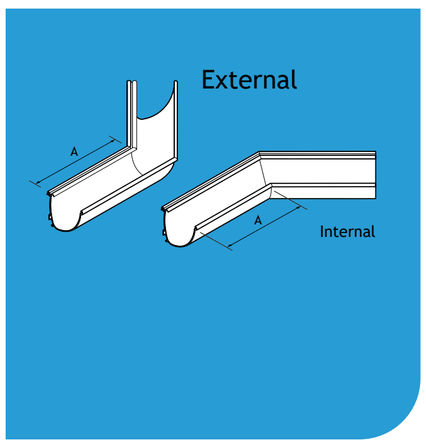

Gutter Size	Type	A	Product Code
100 x 85	External	200	EAQ10/EA13APPC
150 x 120	External	200	EAQ15/EA13APPC
100 x 85	Internal	200	EAQ10/IA13APPC
150 x 120	Internal	200	EAQ15/IA13APPC

Running Outlets Assemblies

Note: A choice of three pipe systems is available. Product codes above denote that running outlets fit to Heritage socketed aluminium pipes. ADD SUFFIX /F TO PRODUCT CODE TO FIT FLUSHJOINT OR GUARDIAN PIPES

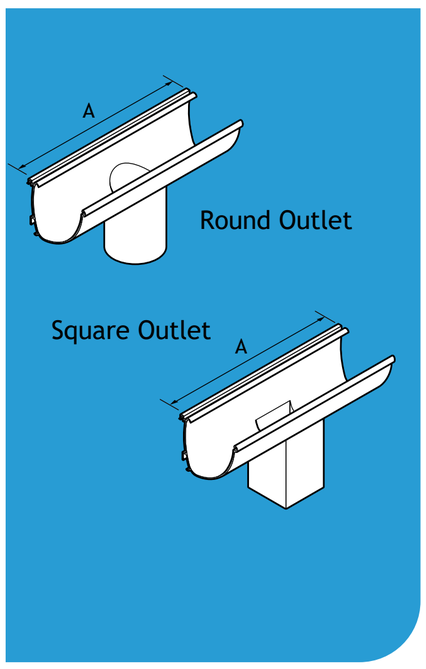

Gutter Size	Pipe Size	A	Product Code
100 x 85	63	300	EAQ10/RO25APPC
150 x 120	63	300	EAQ15/RO25APPC
100 x 85	75	300	EAQ10/RO30APPC
150 x 120	75	300	EAQ15/RO30APPC
150 x 120	100	300	EAQ15/RO40APPC
100 x 85	75 x 75	300	EAQ10/SO33APPC
150 x 120	75 x 75	300	EAQ15/SO33APPC
100 x 85	100 x 75	300	EAQ10/SO43APPC
150 x 120	100 x 75	300	EAQ15/SO43APPC
150 x 120	100 x 100	300	EAQ15/SO44APPC

Stop-End Assemblies

Note: Stop-end Assemblies include Union Clips and Slide Locks

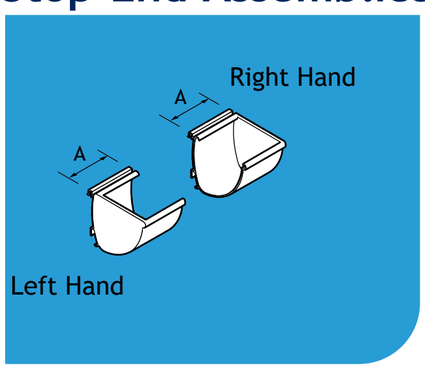

Gutter Size	Type	A	Product Code
100 x 85	Left Hand	50	EAQ10/SELHA
150 x 120	Left Hand	50	EAQ15/SELHA
100 x 85	Right Hand	50	EAQ10/SERHA
150 x 120	Right Hand	50	EAQ15/SERHA

Starter Pack (required with each order)

Includes:

P80 joint/seal lubricant.
2 x jointing tool.
10 x spare lock bars.
20 x spare No 12 screws.
8 x spare seal strips.
20 x shims.

Gutter Size	Product Code
100 x 85	EAQ10/START
150 x 120	EAQ15/START

Note: The products are available in plain mill finish or polyester powder coated using a BBA approved process. Product codes in the tables refer to the powder coated finish. For mill finish please remove the suffix PPC. Sundry items are not included as standard unless otherwise stated. Please order sundry items separately.

Aqualine - Moulded Gutters & Fittings

Contents

Aqualine Moulded Gutters are available in 2 sizes and in standard 3m gutter lengths, together with a complete range of fittings. A classic moulded profile in a state-of-the-art contemporary gutter system. Polyester powder coated using the raincote range on a BBA approved process.

Notes:
All dimensions are in mm unless shown otherwise.
Gutter sizes shown are nominal.
Gutter Assemblies are complete 3 metre assemblies including Gutter Length, Union Clips, Brackets & Slide Locks
T = Gutter Thickness (nominal)

Gutter Assemblies

Note: Gutter Assemblies are supplied with Union Clips and Brackets included. The codes in the table are for additional items, ordered as extras.

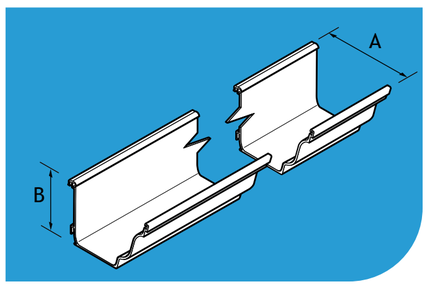

Gutter Size	Gutter Length	A	B	T	Product Code
140 x 100	3000	165	103	3	EMG14/3MAPPC
160 x 100	3000	187	103	3	EMG16/3MAPPC

Union Clip Assemblies

Note: Union Clip Assemblies include Union Clips and Slide Locks

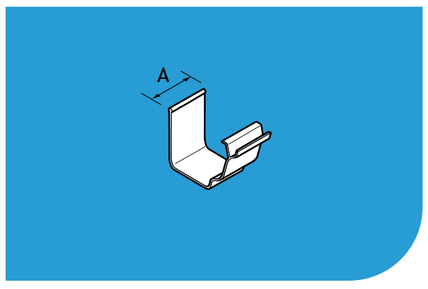

Gutter Size	A	Product Code
140 x 100	76	EMG14/UCAPPC
160 x 100	76	EMG16/UCAPPC

Brackets

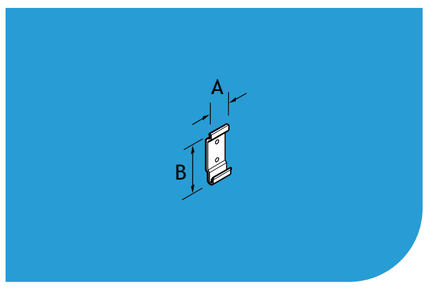

Gutter Size	A	B	Product Code
140 x 100	40	92	EMG14/UCAPPC
160 x 100	40	92	EMG16/UCAPPC

90º Angle Assemblies

Note: Angle Assemblies include Union Clips and Slide Locks

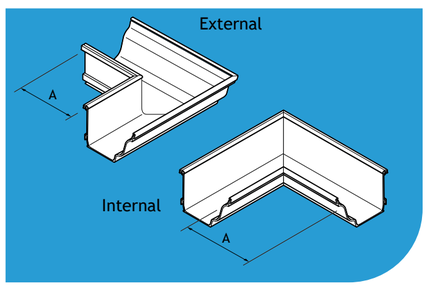

Gutter Size	Type	A	Product Code
140 x 100	External	200	EMG14/EA90APPC
160 x 100	External	200	EMG16/EA90APPC
140 x 100	Internal	200	EMG14/IA90APPC
160 x 100	Internal	200	EMG16/IA90APPC

Note: The products are available in plain mill finish or polyester powder coated using a BBA approved process. Product codes in the tables refer to the powder coated finish. For mill finish please remove the suffix PPC. Sundry items are not included as standard unless otherwise stated. Please order sundry items separately.

135º Angle Assemblies

Note: Angle Assemblies include Union Clips and Slide Locks

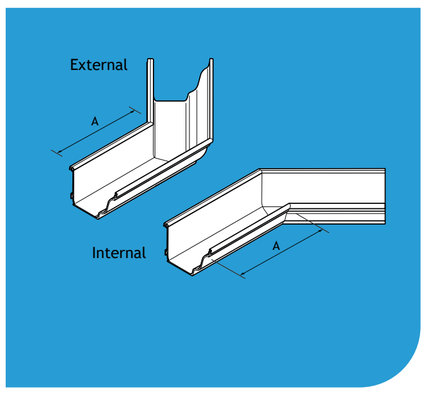

Gutter Size	Type	A	Product Code
140 x 100	External	200	EMG14/EA13APPC
160 x 100	External	200	EMG16/EA13APPC
140 x 100	Internal	200	EMG14/IA13APPC
160 x 100	Internal	200	EMG16/IA13APPC

Running Outlet Assemblies

Note: A choice of three pipe systems is available. Product codes above denote that running outlets fit to Heritage socketed aluminium pipes. ADD SUFFIX /F TO PRODUCT CODE TO FIT FLUSHJOINT OR GUARDIAN PIPES

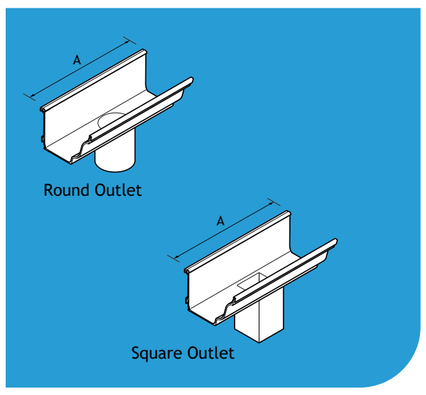

Gutter Size	Pipe Size	A	Product Code
140 x 100	63	300	EMG14/RO25APPC
160 x 100	63	300	EMG16/RO25APPC
140 x 100	75	300	EMG14/RO30APPC
160 x 100	75	300	EMG16/RO30APPC
160 x 100	100	300	EMG16/RO40APPC
140 x 100	75 x 75	300	EMG14/SO33APPC
160 x 100	75 x 75	300	EMG16/SO33APPC
140 x 100	100 x 75	300	EMG14/SO43APPC
160 x 100	100 x 75	300	EMG16/SO43APPC
160 x 100	100 x 100	300	EMG16/SO44APPC

Stop-End Assemblies

Note: Stop-end Assemblies include Union Clips and Slide Locks

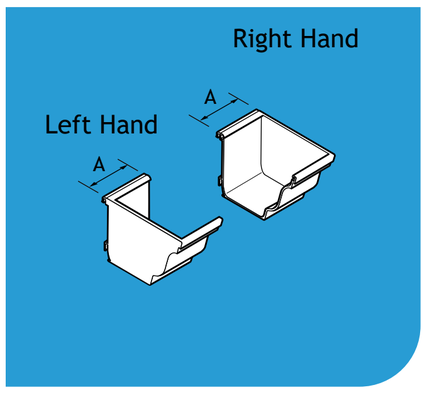

Gutter Size	Type	A	Product Code
140 x 100	Left Hand	50	EMG14/SELHAPPC
160 x 100	Left Hand	50	EMG16/SELHAPPC
140 x 100	Right Hand	50	EMG14/SERHAPPC
160 x 100	Right Hand	50	EMG16/SERHAPPC

Starter Pack (required with each order)

Includes:
P80 joint/seal lubricant.
2 x jointing tool.
10 x spare lock bars.
20 x spare No 12 screws.
8 x spare seal strips.
20 x shims.

Gutter Size	Product Code
140 x 100	EMG14/START
160 x 100	EMG16/START

Note: The products are available in plain mill finish or polyester powder coated using a BBA approved process. Product codes in the tables refer to the powder coated finish. For mill finish please remove the suffix PPC. Sundry items are not included as standard unless otherwise stated. Please order sundry items separately.

Aqualine - Box Gutters & Fittings

Contents

Aqualine Box Gutters are available in 3 sizes and in standard 3m gutter lengths, together with a complete range of fittings. Pronounced angular lines make a strong visual statement. Polyester powder coated using the raincote range on a BBA approved process.

Notes:

All dimensions are in mm unless shown otherwise.
Gutter sizes shown are nominal.
Gutter Assemblies are complete 3 metre assemblies including Gutter length, Union Clips, Brackets and Slide Locks
T = Gutter Thickness (nominal)

Gutter Assemblies

Note: Gutter Assemblies are supplied with Union Clips and Brackets included. The codes in the table are for additional items, ordered as extras.

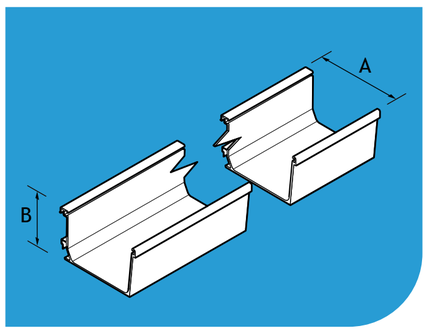

Gutter Size	Gutter Length	A	B	T	Product Code
120 x 80	3000	145	83	3	EBG12/3MAPPC
140 x 100	3000	162	103	3	EBG14/3MAPPC
160 x 100	3000	183	103	3	EBG16/3MAPPC

Union Clip Assemblies

Note: Union Clip Assemblies include Union Clips and Slide Locks

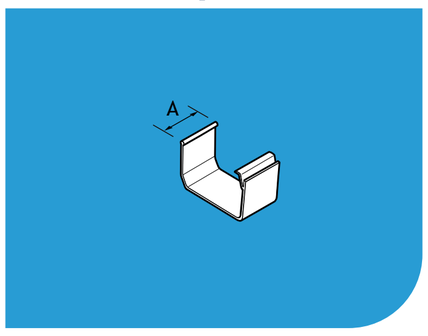

Gutter Size	A	Product Code
120 x 80	76	EBG12/UCAPPC
140 x 100	76	EBG14/UCAPPC
160 x 100	76	EBG16/UCAPPC

Brackets

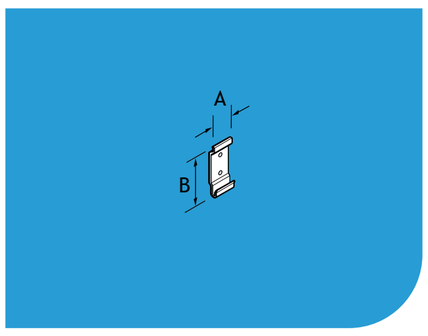

Gutter Size	A	B	Product Code
120 x 80	40	88	EBG12/FBPPC
140 x 100	40	92	EBG14/FBPPC
160 x 100	40	92	EBG16/FBPPC

90º Angle Assemblies

Note: Angle Assemblies include Union Clips and Slide Locks

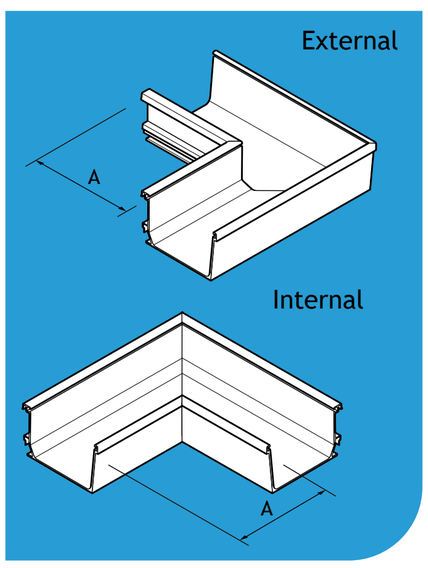

Gutter Size	Type	A	Product Code
120 x 80	External	200	EBG12/EA90APPC
140 x 100	External	200	EBG14/EA90APPC
160 x 100	External	200	EBG16/EA90APPC
120 x 80	Internal	200	EBG12/IA90APPC
140 x 100	Internal	200	EBG14/IA90APPC
160 x 100	Internal	200	EBG16/IA90APPC

Note: The products are available in plain mill finish or polyester powder coated using a BBA approved process. Product codes in the tables refer to the powder coated finish. For mill finish please remove the suffix PPC. Sundry items are not included as standard unless otherwise stated. Please order sundry items separately.

Contents

135º Angle Assemblies

Note: Angle Assemblies include Union Clips and Slide Locks

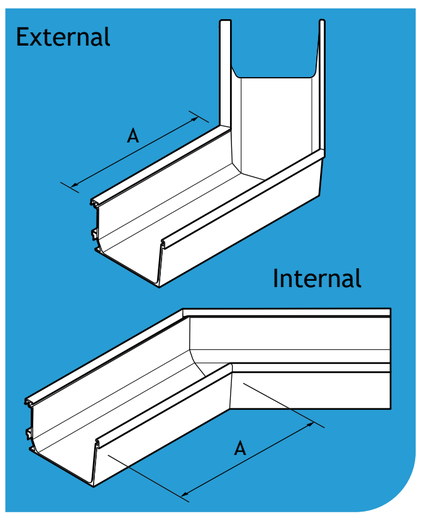

Gutter Size	Type	A	Product Code
120 x 80	External	200	EBG12/EA13APPC
140 x 100	External	200	EBG14/EA13APPC
160 x 100	External	200	EBG16/EA13APPC
120 x 80	Internal	200	EBG12/IA13APPC
140 x 100	Internal	200	EBG14/IA13APPC
160 x 100	Internal	200	EBG16/IA13APPC

Running Outlet Assemblies

Note: A choice of three pipe systems is available. Product codes above denote that running outlets fit to Heritage socketed aluminium pipes. ADD SUFFIX /F TO PRODUCT CODE TO FIT FLUSHJOINT OR GUARDIAN PIPES

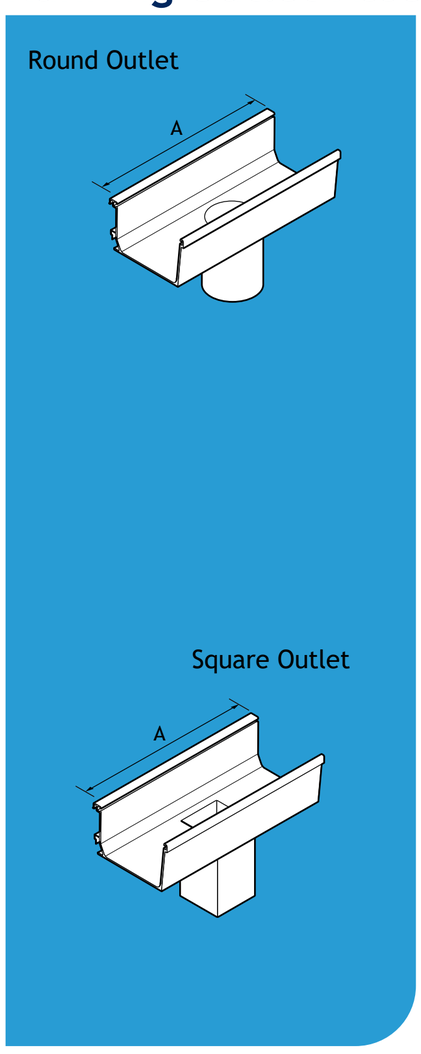

Gutter Size	Pipe Size	A	Product Code
120 x 80	63	300	EBG12/RO25APPC
140 x 100	63	300	EBG14/RO25APPC
160 x 100	63	300	EBG16/RO25APPC
120 x 80	75	300	EBG12/RO30APPC
140 x 100	75	300	EBG14/RO30APPC
160 x 100	75	300	EBG16/RO30APPC
140 x 100	100	300	EBG14/RO40APPC
160 x 100	100	300	EBG16/RO40APPC
120 x 80	75 x 75	300	EBG12/SO33APPC
140 x 100	75 x 75	300	EBG14/SO33APPC
160 x 100	75 x 75	300	EBG16/SO33APPC
120 x 80	100 x 75	300	EBG12/SO43APPC
140 x 100	100 x 75	300	EBG14/SO43APPC
160 x 100	100 x 75	300	EBG16/SO43APPC
140 x 100	100 x 100	300	EBG14/SO44APPC
160 x 100	100 x 100	300	EBG16/SO44APPC

Stop-End Assemblies

Note: Stop-end Assemblies include Union Clips and Slide Locks

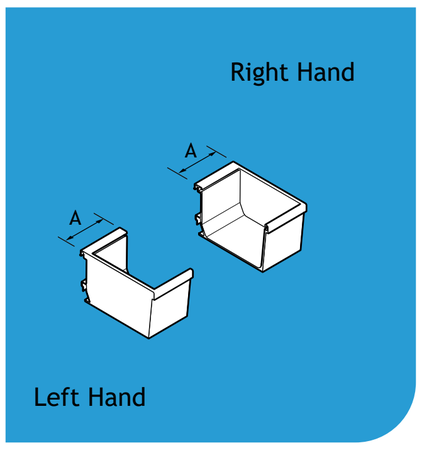

Gutter Size	Type	A	Product Code
120 x 80	Left Hand	50	EBG12/SELHAPPC
140 x 100	Left Hand	50	EBG14/SELHAPPC
160 x 100	Left Hand	50	EBG16/SELHAPPC
120 x 80	Right Hand	50	EBG12/SERHAPPC
140 x 100	Right Hand	50	EBG14/SERHAPPC
160 x 100	Right Hand	50	EBG16/SERHAPPC

Starter Pack (required with each order)

Includes:

P80 joint/seal lubricant.
2 x jointing tool.
10 x spare lock bars.
20 x spare No 12 screws.
8 x spare seal strips.
20 x shims.

Gutter Size	Product Code
120 x 80	EBG12/START
140 x 100	EBG14/START
160 x 100	EBG16/START

Note: The products are available in plain mill finish or polyester powder coated using a BBA approved process. Product codes in the tables refer to the powder coated finish. For mill finish please remove the suffix PPC. Sundry items are not included as standard unless otherwise stated. Please order sundry items separately.

AX SnapFix Extruded Gutter Systems - Summary

AX SnapFix The lightweight extruded aluminium range of gutters with new SnapFix design in a number of sizes and finishes

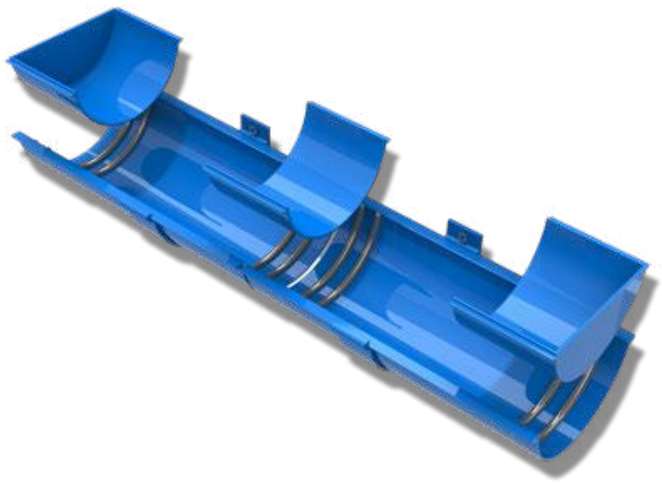

AX SnapFix Beaded Half Round Gutter

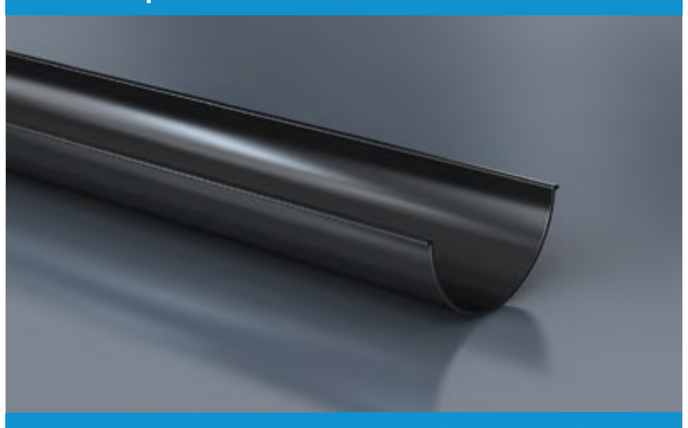

113 x 55.2mm AXSBH11
125 x 66mm AXBSH12
150 x 78.5mm AXBSH15

AX SnapFix Deep Run Gutter

125 x 100mm AXSDR12

AX SnapFix Moulded Gutter

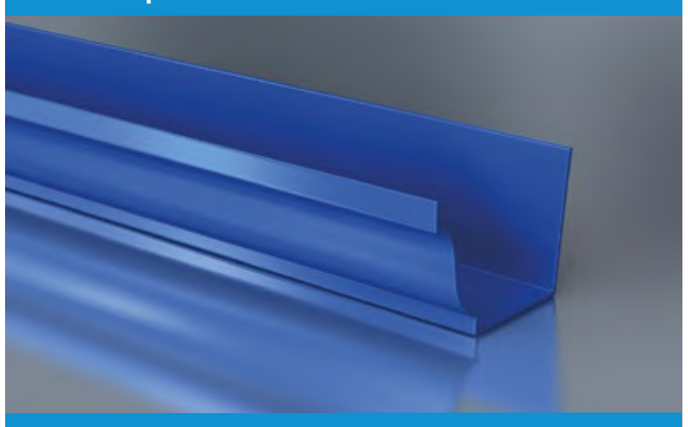

125 x 100mm AXSMG12

AX Moulded Gutter*

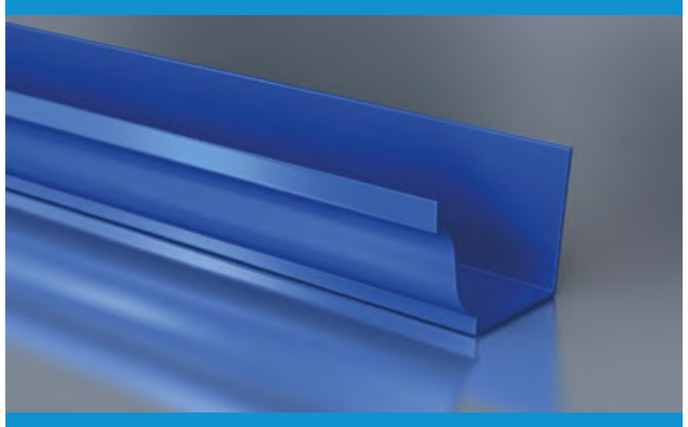

150 x 100mm AXMG15
200 x 150mm AXMG20
*Requires nuts & bolts

Applications

- High capacity gutters for traditional or modern buildings
- Suited to both flush & projecting eaves applications
- Long life alternative to PVC gutters

Features & Performance

- 3 gutter profiles available in 3 and 1metre lengths in a choice of sizes
- Designed to fully accommodate thermal movement at every joint
- Lightweight, durable and highly corrosion resistant
- Life expectancy of aluminium: 40 years (rural/suburban areas); up to 25 years (industrial/marine areas)
- Easy to handle and fix
- Aluminium is 100% recyclable

Manufacture

- UK manufactured under ISO 9001 and ISO 14001 factory certified conditions
- Based on aluminium extrusions 6063 T6 alloy to BS EN 573:2013, BS EN 755, BS EN 12020 and BS 9101

Installation & Fixings

- Improved design with SnapFix system
- Quicker installation time
- No nut, bolt or washer required
- More durable seal
- Less sealant required to traditional nut, bolt & washer systems

BBA APPROVAL INSPECTION TESTING CERTIFICATION
CERTIFICATE No.86/1671

AX SnapFix - Beaded Half Round Gutters & Fittings

Contents

AX SnapFix Half Round Gutters are available in 3 sizes in standard 3m gutter lengths, together with a complete range of fittings. A contemporary profile that incorporates well into virtually any design, traditional or contemporary. Polyester powder coated using the raincote range on a BBA approved process.

Notes: All dimensions are in mm unless shown otherwise.
Gutter sizes shown are nominal.
T = Gutter Thickness (nominal)

Gutter Assemblies

Note: Unions supplied with assembly

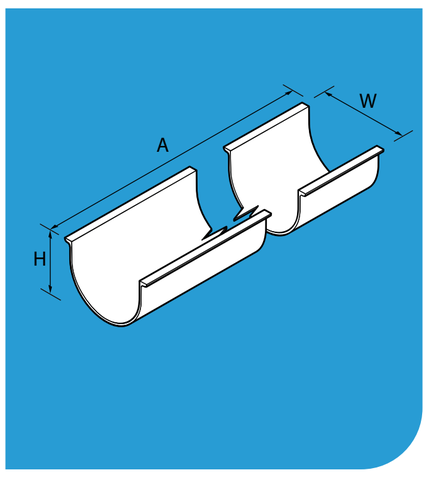

Gutter Size	Gutter Length	A	B	T	Product Code
113 x 55.2	3000	112	60	2	AXSBH11/3MAPPC
125 x 66	3000	125	70	2.3	AXSBH12/3MAPPC
150 x 78.5	3000	150	85	2.5	AXSBH15/3MAPPC
113 x 55.2	1000	112	60	2	AXSBH11/1MAPPC
125 x 66	1000	125	70	2.3	AXSBH12/1MAPPC
150 x 78.5	1000	150	85	2.5	AXSBH15/1MAPPC

Union Clip

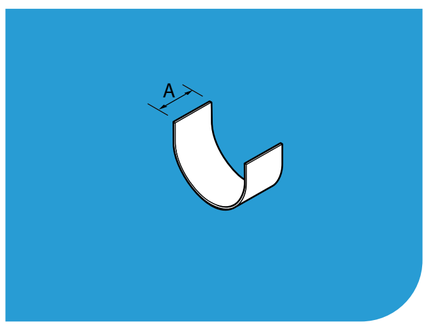

Gutter Size	A	Product Code
113 x 55.2	76	AXSBH11/UCPPC
125 x 66	76	AXSBH12/UCPPC
150 x 78.5	76	AXSBH15/UCPPC

Fascia Brackets

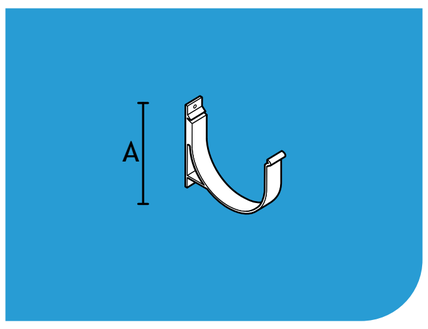

Gutter Size	A	B	Product Code
113 x 55.2	30	70	AXSBH11/FBPPC
125 x 66	30	70	AXSBH12/FBPPC
150 x 78.5	30	80	AXSBH15/FBPPC

90° Angle Assemblies

Note: Unions supplied with assembly

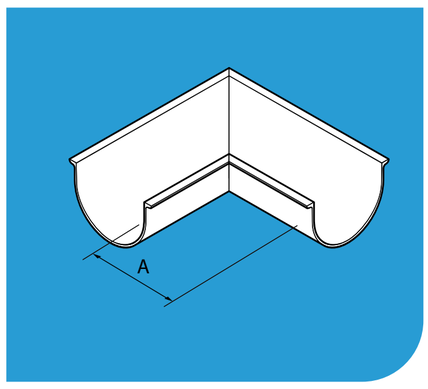

Gutter Size	A	Product Code
113 x 55.2	100	AXSBH11/90APPC
125 x 66	100	AXSBH12/90APPC
150 x 78.5	100	AXSBH15/90APPC

Note: The products are available in plain mill finish or polyester powder coated using a BBA approved process. Product codes in the tables refer to the powder coated finish. For mill finish please remove the suffix PPC. Sundry items are not included as standard unless otherwise stated. Please order sundry items separately.

135° Angle Assemblies

Note: Unions supplied with assembly

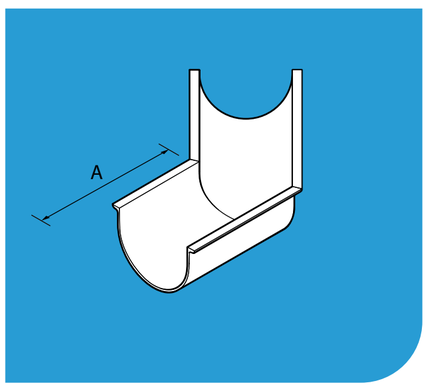

Gutter Size	A	Product Code
113 x 55.2	100	AXSBH11/135APPC
125 x 66	100	AXSBH12/135APPC
150 x 78.5	100	AXSBH15/135APPC

Running Outlet Assemblies

Note: Unions supplied with assembly

Round Outlet

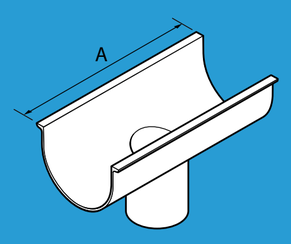

Square Outlet

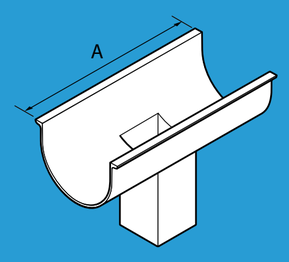

Gutter Size	Pipe Size	A	Product Code
113 x 55.2	63	300	AXSBH11/RO25APPC
125 x 66	63	300	AXSBH12/RO25APPC
150 x 78.5	63	300	AXSBH15/RO25APPC
113 x 55.2	76	300	AXSBH11/RO30APPC
125 x 66	76	300	AXSBH12/RO30APPC
150 x 78.5	76	300	AXSBH15/RO30APPC
113 x 55.2	102	300	AXSBH12/RO40APPC
125 x 66	102	300	AXSBH15/RO40APPC
150 x 78.5	75 x 75	300	AXSBH11/SO33APPC
113 x 55.2	75 x 75	300	AXSBH12/SO33APPC
125 x 66	75 x 75	300	AXSBH15/SO33APPC
150 x 78.5	100 x 75	300	AXSBH11/SO43APPC
125 x 66	100 x 75	300	AXSBH12/SO43APPC
150 x 78.5	100 x 75	300	AXSBH15/SO43APPC
125 x 66	100 x 100	300	AXSBH12/SO44APPC
150 x 78.5	100 x 100	300	AXSBH15/SO44APPC

Note:
A choice of three pipe systems is available. Product codes above denote that running outlets fit to Heritage socketed aluminium pipes.
ADD SUFFIX /F TO PRODUCT CODE TO FIT FLUSHJOINT OR GUARDIAN PIPES

Stop-End Assemblies

Note: Unions supplied with assembly

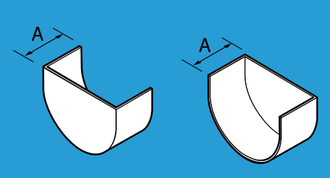

Gutter Size	A	Product Code
113 x 55.2	50	AXSBH11/SEAPPC
125 x 66	50	AXSBH12/SEAPPC
150 x 78.5	50	AXSBH15/SEAPPC

Note: The products are available in plain mill finish or polyester powder coated using a BBA approved process. Product codes in the tables refer to the powder coated finish. For mill finish please remove the suffix PPC. Sundry items are not included as standard unless otherwise stated. Please order sundry items separately.

AX SnapFix - Beaded Deep Run Gutters & Fittings

Contents

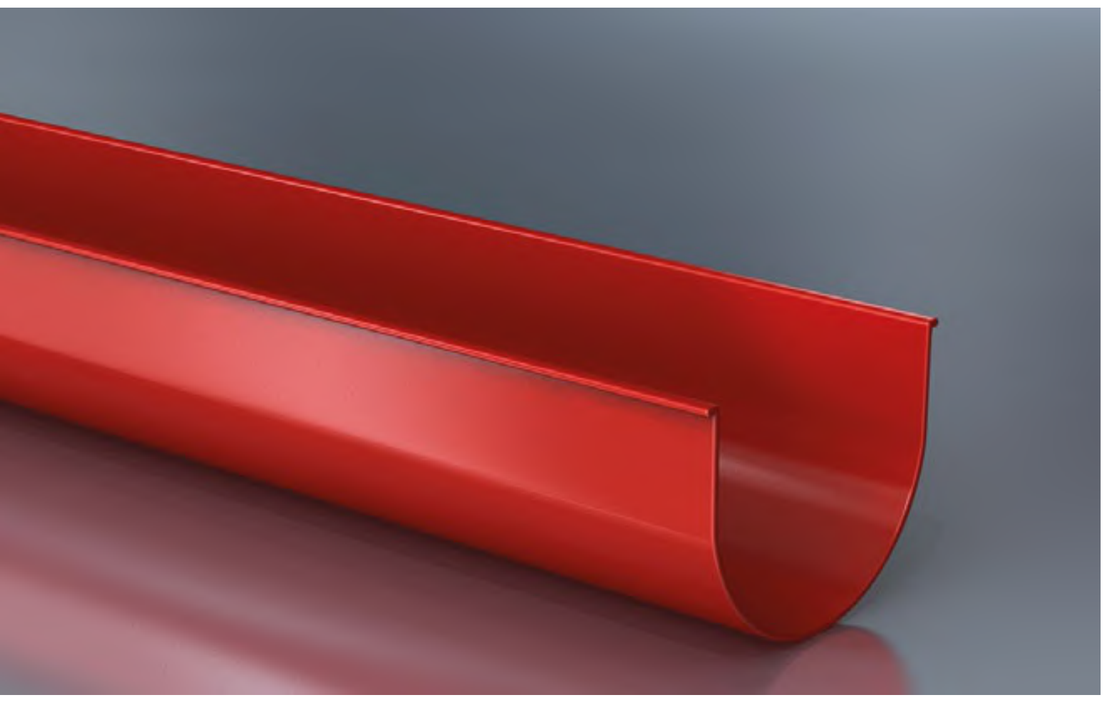

AX SnapFix Beaded Deep Run Gutters combine economy and efficiency where a high capacity gutter and extra performance is required. Available in one size and in standard 3m gutter lengths, together with a complete range of fittings. Polyester powder coated using the raincote range on a BBA approved process.

Notes:
All dimensions are in mm unless shown otherwise.
Gutter sizes shown are nominal.
T = Gutter Thickness (nominal)

Gutter Assemblies

Note: Unions supplied with assembly

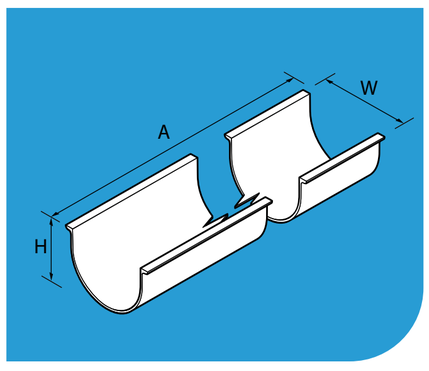

Gutter Size	A	W	H	T	Product Code
125 x 100	3000	125	100	3	AXSDR12/3MAPPC
125 x 100	1000	125	100	3	AXSDR12/1MAPPC

Union Clip

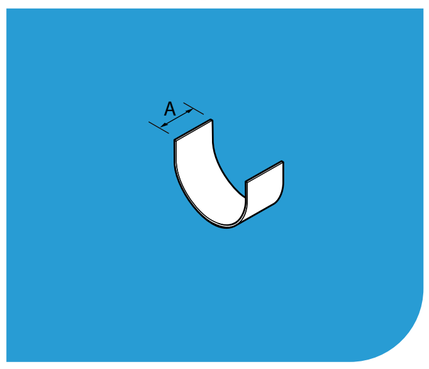

Gutter Size	A	Product Code
125 x 100	76	AXSDR12/UCPPC

Brackets

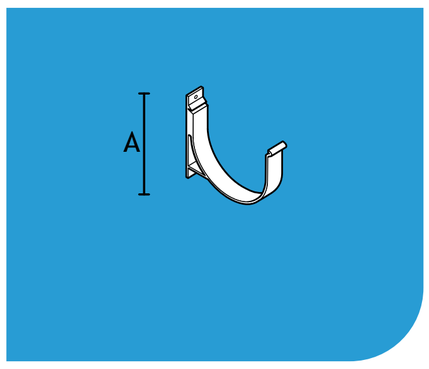

Gutter Size	A	Product Code
125 x 100	30	AXSDR12/FBPPC

90° Angle Assemblies

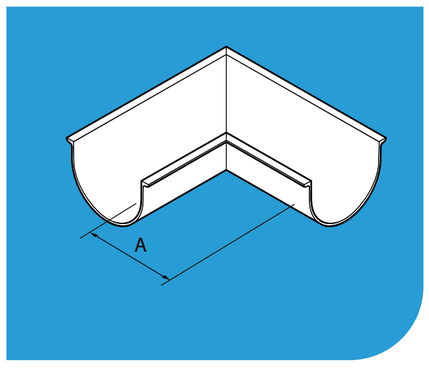

Gutter Size	A	Product Code
125 x 100	100	AXSDR12/90APPC

Note: Unions supplied with assembly

Note: The products are available in plain mill finish or polyester powder coated using a BBA approved process. Product codes in the tables refer to the powder coated finish. For mill finish please remove the suffix PPC. Sundry items are not included as standard unless otherwise stated. Please order sundry items separately.

AX SnapFix - Beaded Deep Run Gutters & Fittings - Cont.

Contents

135° Angle Assemblies Note: Unions supplied with assembly

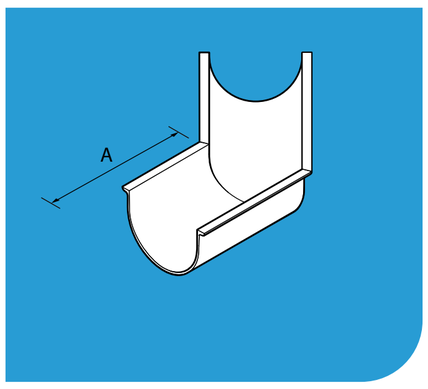

Gutter Size	A	Product Code
125 x 100	100	AXSDR12/135APPC

Running Outlet Assemblies Note: Unions supplied with assembly

Round Outlet

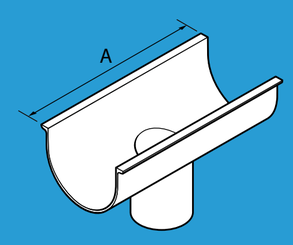

Square Outlet

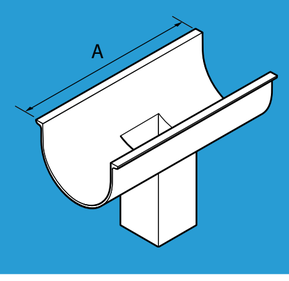

Gutter Size	Pipe Size	A	Product Code
125 x 100	63	300	AXSDR12/RO25APPC
125 x 100	76	300	AXSDR12/RO30APPC
125 x 100	103	300	AXSDR12/RO40APPC
125 x 100	76 x 76	300	AXSDR12/SO33APPC
125 x 100	100 x 75	300	AXSDR12/SO43APPC
125 x 100	100 x 100	300	AXSDR12/SO44APPC

Note: A choice of three pipe systems is available. Product codes above denote that running outlets fit to Heritage socketed aluminium pipes.

ADD SUFFIX /F TO PRODUCT CODE TO FIT FLUSHJOINT OR GUARDIAN PIPES

Stop-End Assemblies Note: Unions supplied with assembly

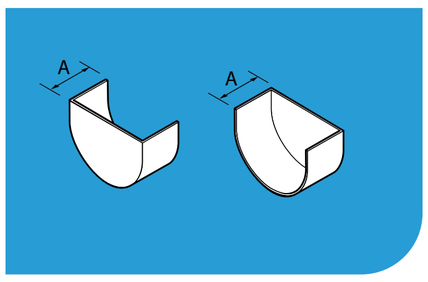

Gutter Size	A	Product Code
125 x 100	50	AXSDR12/SEAPPC

Note: The products are available in plain mill finish or polyester powder coated using a BBA approved process. Product codes in the tables refer to the powder coated finish. For mill finish please remove the suffix PPC. Sundry items are not included as standard unless otherwise stated. Please order sundry items separately.

AX SnapFix - Moulded Gutters & Fittings

AX SnapFix Moulded Gutters offer economy and practicality with a classic profile in a contemporary gutter system. Available in 2 sizes and in standard 3m gutter lengths, together with a complete range of fittings. Polyester powder coated using the raincote range on a BBA approved process.

Notes:
All dimensions are in mm unless shown otherwise.
Gutter sizes shown are nominal.
T = Gutter Thickness (nominal)

Gutter Assemblies

Note: Unions supplied with assembly

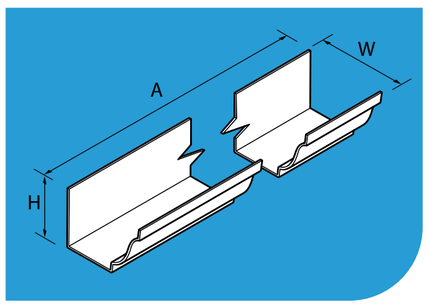

Gutter Size	A	W	H	T	Product Code
125 x 100	3000	100	75	3	AXSMG12/3MAPPC
125 x 100	1000	100	75	3	AXSMG12/1MAPPC

Union Clip

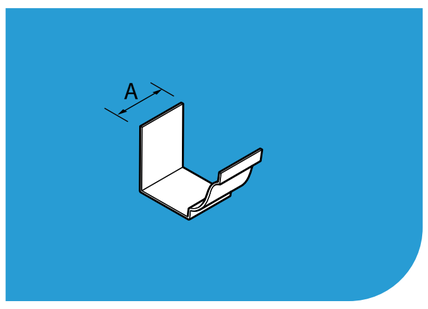

Gutter Size	A	Product Code
125 x 100	100	AXSMG12/UCPPC

Brackets

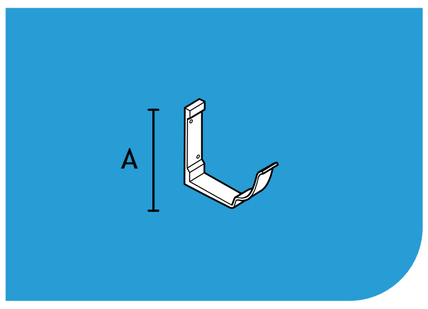

Gutter Size	A	Product Code
125 x 100	30	AXSMG12/FBPPC

Note: The products are available in plain mill finish or polyester powder coated using a BBA approved process. Product codes in the tables refer to the powder coated finish. For mill finish please remove the suffix PPC. Sundry items are not included as standard unless otherwise stated. Please order sundry items separately.

Contents

90º Angle Assemblies

Note: Unions supplied with assembly

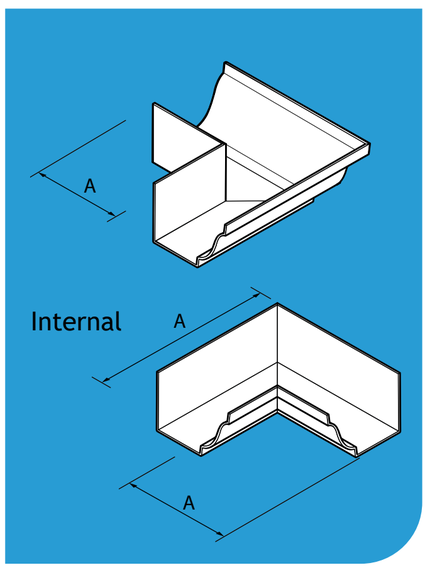

Gutter Size	Type	A	Product Code
125 x 100	External	100	AXSMG12/EA90APPC
125 x 100	Internal	100	AXSMG12/IA90APPC

135º Angle Assemblies

Note: Unions supplied with assembly

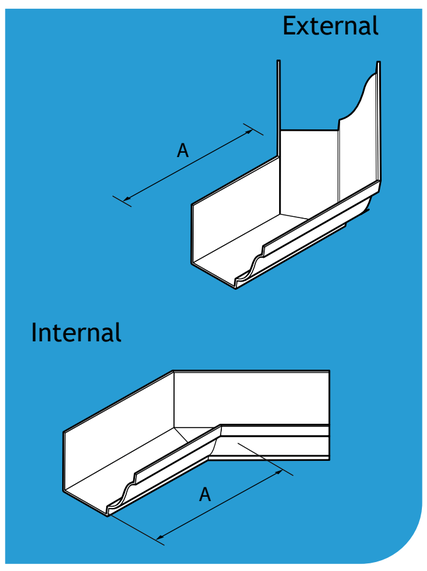

Gutter Size	Type	A	Product Code
125 x 100	External	100	AXSMG12/EA135APPC
125 x 100	Internal	100	AXSMG12/IA135APPC

Running Outlet Assemblies

Note: Unions supplied with assembly

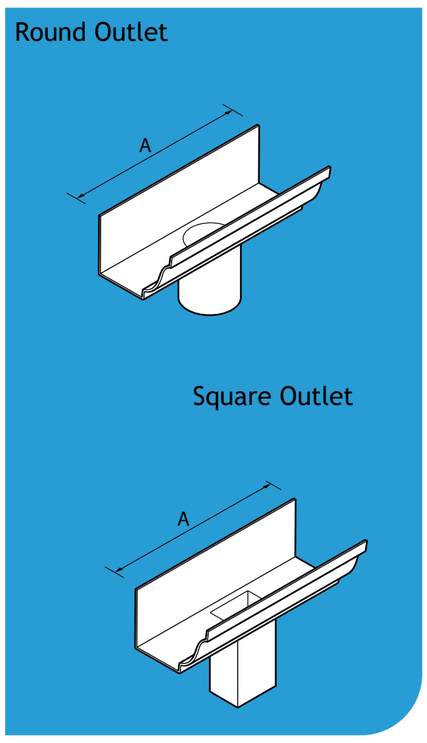

Gutter Size	Pipe Size	A	Product Code
125 x 100	63	300	AXSMG12/RO25APPC
125 x 100	76	300	AXSMG12/RO30APPC
125 x 100	102	300	AXSMG12/RO40APPC
125 x 100	76 x 100	300	AXSMG12/SO33APPC
125 x 100	100 x 76	300	AXSMG12/SO43APPC
125 x 100	100 x 100	300	AXSMG12/SO44APPC

Note: A choice of three pipe systems is available. Product codes above denote that running outlets fit to Heritage socketed aluminium pipes.
ADD SUFFIX /F TO PRODUCT CODE TO FIT FLUSHJOINT OR GUARDIAN PIPES

Stop-End Assemblies

Note: Unions supplied with assembly

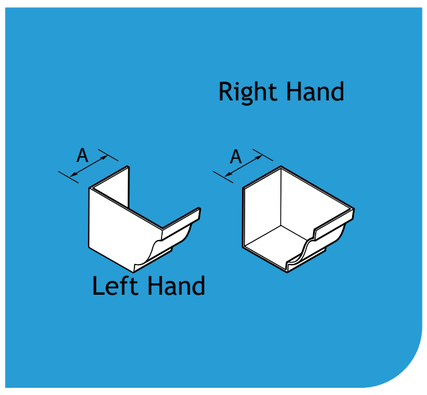

Gutter Size	Type	A	Product Code
125 x 100	Left Hand	50	AXSMG12/SELHAPPC
125 x 100	Right Hand	50	AXSMG12/SERHAPPC

Note: The products are available in plain mill finish or polyester powder coated using a BBA approved process. Product codes in the tables refer to the powder coated finish. For mill finish please remove the suffix PPC. Sundry items are not included as standard unless otherwise stated. Please order sundry items separately.

AX - Moulded Gutters & Fittings

Contents

AX Moulded Gutters offer economy and practicality with a classic profile in a contemporary gutter system. Available in four sizes and in standard 3m gutter lengths, together with a complete range of fittings. Polyester powder coated using the raincote range on a BBA approved process.

Notes:
All dimensions are in mm unless shown otherwise.
Gutter sizes shown are nominal.
T = Gutter Thickness (nominal)

Gutter Assemblies

Note: Unions supplied with assembly

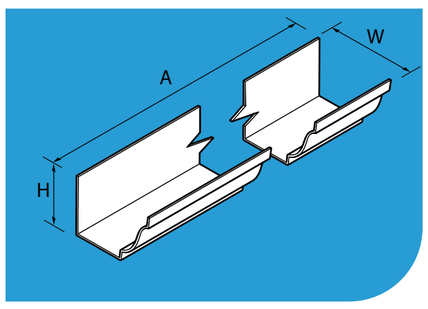

Gutter Size	A	W	H	T	Product Code
150 x 100	3000	150	100	3	AXMG15/3MAPPC
200 x 150	3000	200	150	3	AXMG20/3MAPPC
150 x 100	1000	150	100	3	AXMG15/1MAPPC
200 x 150	1000	200	150	3	AXMG20/1MAPPC

Union Clip Assemblies

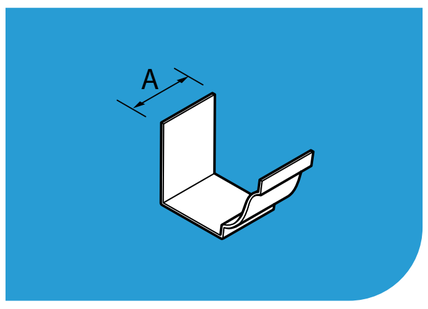

Gutter Size	A	Product Code
150 x 100	76	AXMG15/UCAPPC
200 x 150	76	AXMG20/UCAPPC

Brackets

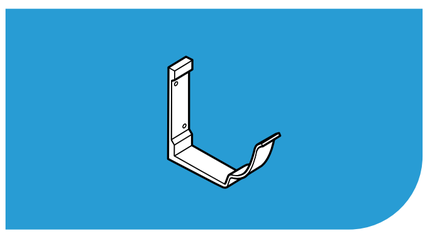

Gutter Size	A	Product Code
150 x 100	30	AXMG15/FBPPC
200 x 150	30	AXMG20/FBPPC

90º Angle Assemblies

Note: Unions supplied with assembly

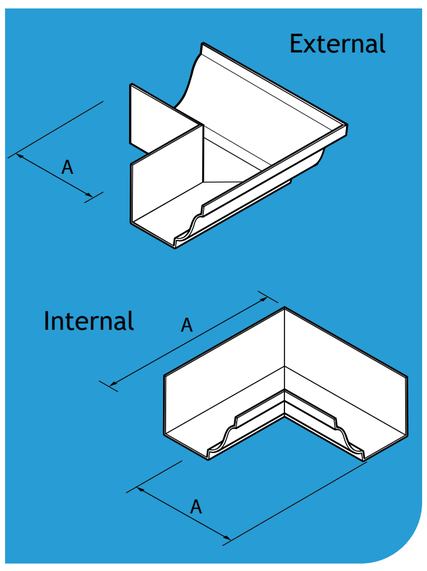

Gutter Size	Type	A	Product Code
150 x 100	External	100	AXMG15/EA90APPC
200 x 150	External	100	AXMG20/EA90APPC
150 x 100	Internal	100	AXMG15/IA90APPC
200 x 150	Internal	100	AXMG20/IA90APPC

Note: The products are available in plain mill finish or polyester powder coated using a BBA approved process. Product codes in the tables refer to the powder coated finish. For mill finish please remove the suffix PPC. Sundry items are not included as standard unless otherwise stated. Please order sundry items separately.

Contents

135º Angle Assemblies

Note: Unions supplied with assembly

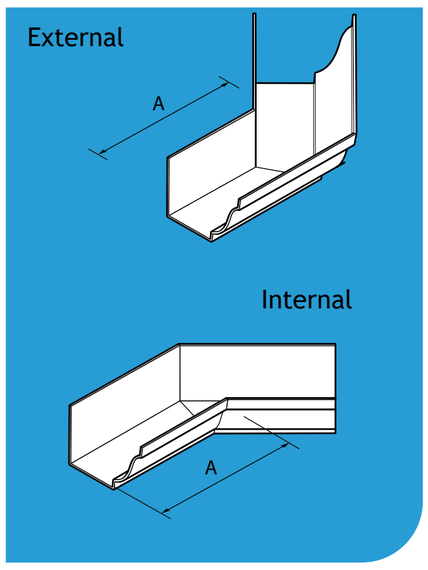

Gutter Size	Type	A	Product Code
150 x 100	External	100	AXMG15/EA135APPC
200 x 150	External	100	AXMG20/EA135APPC
150 x 100	Internal	100	AXMG15/IA135APPC
200 x 150	Internal	100	AXMG20/IA135APPC

Running Outlet Assemblies

Note: Unions supplied with assembly

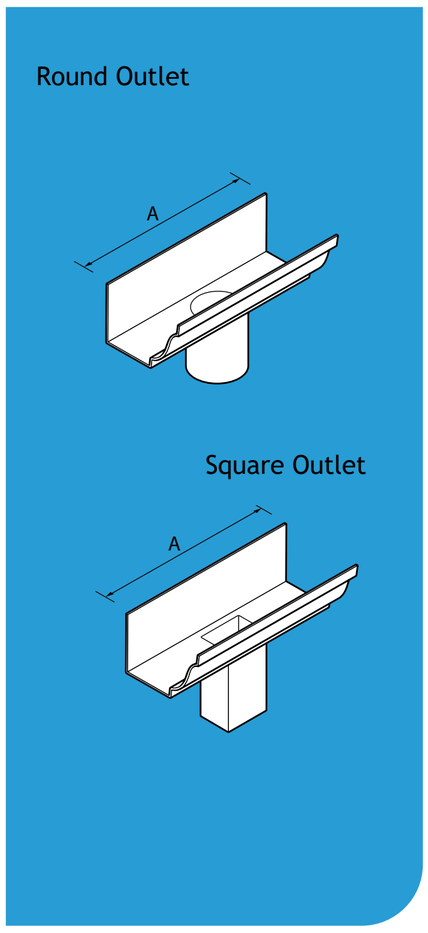

Gutter Size	Pipe Size	A	Product Code
150 x 100	63	300	AXMG15/RO25APPC
200 x 150	63	300	AXMG20/RO25APPC
150 x 100	76	300	AXMG15/RO30APPC
200 x 150	76	300	AXMG20/RO30APPC
150 x 100	102	300	AXMG15/RO40APPC
200 x 150	102	300	AXMG20/RO40APPC
150 x 100	76 x 76	300	AXMG15/SO33APPC
200 x 150	76 x 76	300	AXMG20/SO33APPC
150 x 100	100 x 76	300	AXMG15/SO43APPC
200 x 150	100 x 76	300	AXMG20/SO43APPC
150 x 100	100 x 100	300	AXMG15/SO44APPC
200 x 150	100 x 100	300	AXMG20/SO44APPC

Note: A choice of three pipe systems is available. Product codes above denote that running outlets fit to Heritage socketed aluminium pipes. ADD SUFFIX /F TO PRODUCT CODE TO FIT FLUSHJOINT OR GUARDIAN PIPES

Stop-End Assemblies

Note: Unions supplied with assembly

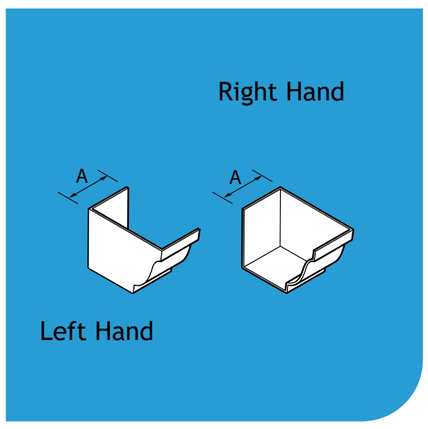

Gutter Size	Type	A	Product Code
150 x 100	Left Hand	50	AXMG15/SELHAPPC
200 x 150	Left Hand	50	AXMG20/SELHAPPC
150 x 100	Right Hand	50	AXMG15/SERHAPPC
200 x 150	Right Hand	50	AXMG20/SERHAPPC

Note: The products are available in plain mill finish or polyester powder coated using a BBA approved process. Product codes in the tables refer to the powder coated finish. For mill finish please remove the suffix PPC. Sundry items are not included as standard unless otherwise stated. Please order sundry items separately.

GX - Pressed Aluminium Gutter Systems - Product Summary

A robust and fully engineered box section gutter range designed for traditional wet jointing on site. GX is offered in three profiles in a choice of sizes and is especially suited to applications where maximum capacity gutters are required.

GX - Joggle Gutter

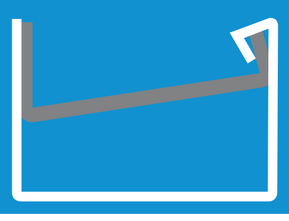

100 x 75mm - GXJ1
125 x 100mm - GXJ2
150 x 100mm - GXJ3
180 x 125mm - GXJ4
200 x 150mm - GXJ5

GX - Smooth Gutter

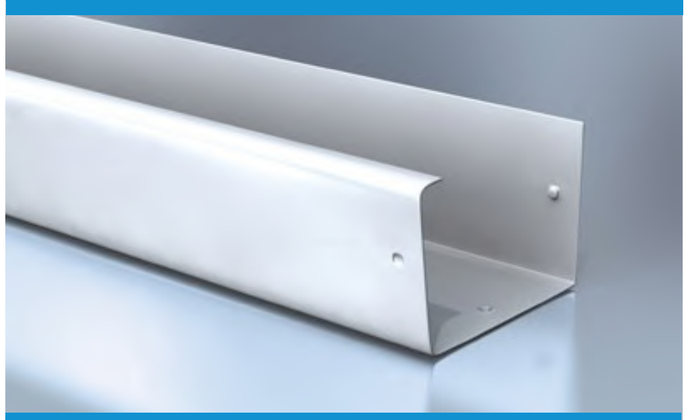

120 x 75mm - GXS1
140 x 100mm - GXS2
190 x 125mm - GXS3
220 x 150mm - GXS4
225 x 150mm - GXS5

GX - Moulded Gutter

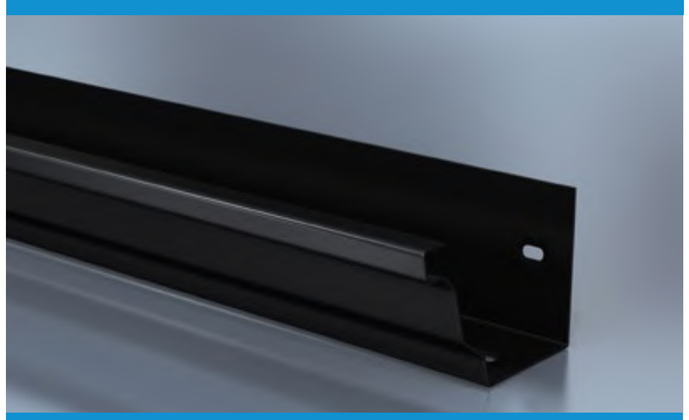

113 x 75mm - GXM1
140 x 100mm - GXM2
160 x 100mm - GXM3
175 x 150mm - GXM4
200 x 150mm - GXM5

Applications

- High capacity gutters for traditional or modern buildings
- Fully compatible with Alumasc's Skyline fascia/soffit system
- Can provide an all aluminium eaves/soffit solution
- Gutters can be exposed or concealed

Features & Performance

- 3 gutter profiles available in 3 metre lengths, in a choice of sizes
- Designed to fully accommodate thermal movement at every joint
- Lightweight, durable and non-corrodible
- Life expectancy of aluminium:
  40 years (rural/suburban areas);
  up to 25 years (industrial/marine areas)
- Easy to handle and fix
- BBA approved
- Aluminium is 100% recyclable

Manufacture

- UK manufactured
- Gutter lengths, fittings and unions are pressed from various thicknesses of sheet aluminium (to BS EN 1462:1997, BS EN 612:1996 to BS EN 515:1993, BS EN 573:1995 and BS EN 485)

Installation & Fixing

- Wet sealed and bolted joints - a simple, well proven method
- Simple screw fixing with bracketry, generally concealed after fixing
- GX Joggle is supported by top straps
- GX Smooth is designed for simple jointing for a sleek appearance, including no requirement for sole support brackets and visible screw fixing
- GX Moulded is wet jointed and is fixed directly to the building fabric
- Minimal maintenance requirements

GX - Joggle Gutters & Fittings

Contents

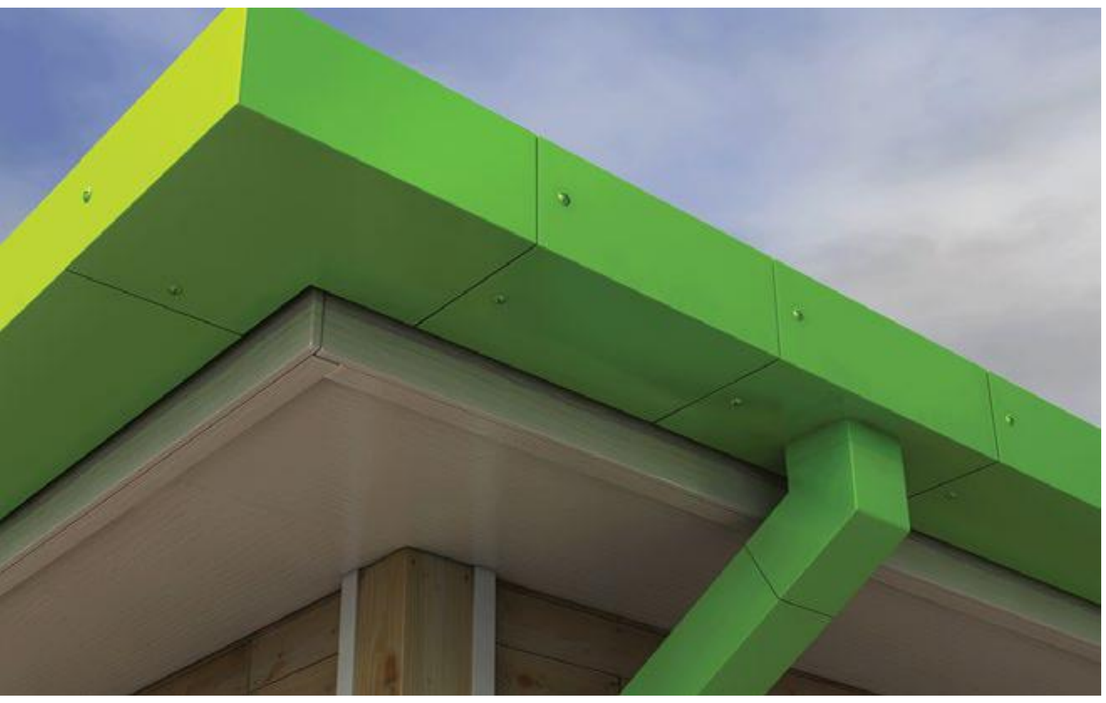

GX Joggle Gutters are available in 5 sizes, together with a complete range of fittings. The range comprises vertical sides, sharp angled bends, and a returned lip, plus top strap for increased strength and rigidity. Polyester powder coated using the raincote range on a BBA approved process.

Notes:
All dimensions are in mm unless shown otherwise.
Gutter sizes shown are nominal.
Gutter Lengths are left hand spigot. All fittings are double spigot.
T = gutter thickness (nominal).

Gutter Lengths

Note: Gutter lengths are supplied complete with top strap and fixings

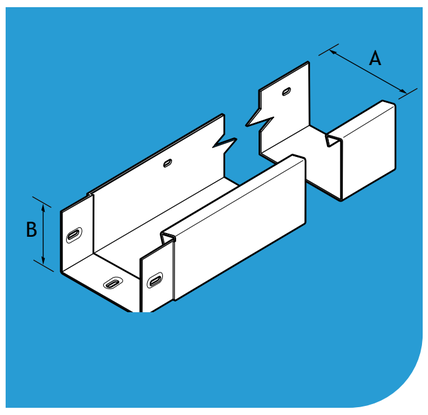

Gutter Size	Gutter Length	A	B	T	Product Code
100 x 75	3000	102	76	2	GXJ1/3MAPPC
125 x 100	3000	127	102	2	GXJ2/3MAPPC
150 x 100	3000	152	102	2	GXJ3/3MAPPC
180 x 125	3000	180	125	2	GXJ4/3MAPPC
200 x 150	3000	204	152	2	GXJ5/3MAPPC

Top Straps

Note: Gutters and fittings are supplied with top straps included. The codes in this table are for additional items, ordered as extras

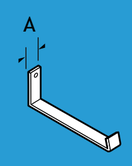

Gutter Size	A	Product Code
100 x 75	25	GXJ1/TSPPC
125 x 100	25	GXJ2/TSPPC
150 x 100	25	GXJ3/TSPPC
180 x 125	25	GXJ4/TSPPC
200 x 150	25	GXJ5/TSPPC

Union Clips

Note: Gutters and fittings are supplied with union clips included. The codes in this table are for additional items, ordered as extras

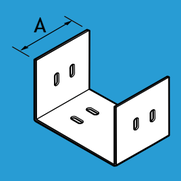

Gutter Size	A	Product Code
100 x 75	76	GXJ1/UCAPPC
125 x 100	76	GXJ2/UCAPPC
150 x 100	76	GXJ3/UCAPPC
180 x 125	76	GXJ4/UCAPPC
200 x 150	76	GXJ5/UCAPPC

Stop-Ends - Internal

Note: Stop-Ends are supplied complete with fixings

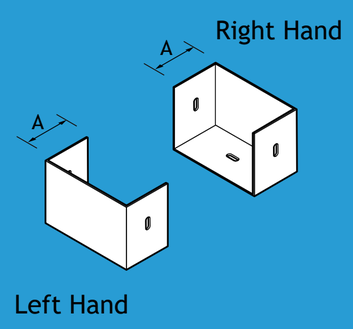

Gutter Size	Type	A	Product Code
100 x 75	Left Hand	40	GXJ1/SELHAPPC
125 x 100	Left Hand	40	GXJ2/SELHAPPC
150 x 100	Left Hand	40	GXJ3/SELHAPPC
180 x 125	Left Hand	40	GXJ4/SELHAPPC
200 x 150	Left Hand	40	GXJ5/SELHAPPC
100 x 75	Right Hand	40	GXJ1/SERHAPPC
125 x 100	Right Hand	40	GXJ2/SERHAPPC
150 x 100	Right Hand	40	GXJ3/SERHAPPC
180 x 125	Right Hand	40	GXJ4/SERHAPPC
200 x 150	Right Hand	40	GXJ5/SERHAPPC

Note: The products are available in plain mill finish or polyester powder coated using a BBA approved process. Product codes in the tables refer to the powder coated finish. For mill finish please remove the suffix PPC. Sundry items are not included as standard unless otherwise stated. Please order sundry items separately.

GX - Joggle Gutters & Fittings - Cont.

Contents

90° Angles

Note: Angles are supplied complete with top strap and fixings

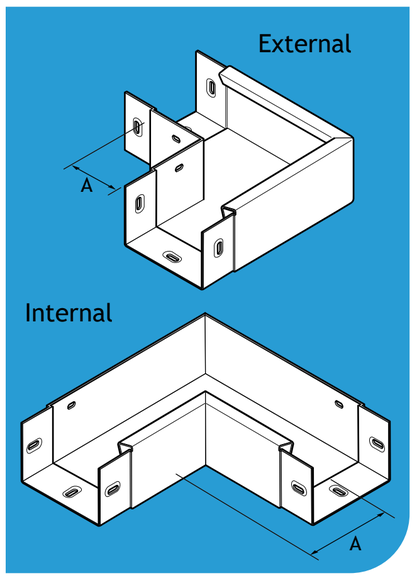

Gutter Size	Type	A	Product Code
100 x 75	External	100	GXJ1/EA90APPC
125 x 100	External	100	GXJ2/EA90APPC
150 x 100	External	100	GXJ3/EA90APPC
180 x 125	External	100	GXJ4/EA90APPC
200 x 150	External	100	GXJ5/EA90APPC
100 x 75	Internal	100	GXJ1/IA90APPC
125 x 100	Internal	100	GXJ2/IA90APPC
150 x 100	Internal	100	GXJ3/IA90APPC
180 x 125	Internal	100	GXJ4/IA90APPC
200 x 150	Internal	100	GXJ5/IA90APPC

135° Angles

Note: Angles are supplied complete with top strap and fixings

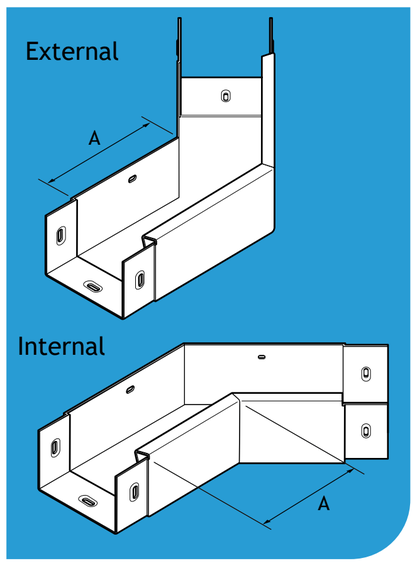

Gutter Size	Type	A	Product Code
100 x 75	External	100	GXJ1/EA135APPC
125 x 100	External	100	GXJ2/EA135APPC
150 x 100	External	100	GXJ3/EA135APPC
180 x 125	External	100	GXJ4/EA135APPC
200 x 150	External	100	GXJ5/EA135APPC
100 x 75	Internal	100	GXJ1/IA135APPC
125 x 100	Internal	100	GXJ2/IA135APPC
150 x 100	Internal	100	GXJ3/IA135APPC
180 x 125	Internal	100	GXJ4/IA135APPC
200 x 150	Internal	100	GXJ5/IA135APPC

Running Outlets - Standard

Note: A choice of three pipe systems is available. Product codes denote that running outlets fit to Heritage socketed aluminium pipes. ADD SUFFIX /F TO PRODUCT CODE TO FIT FLUSHJOINT OR GUARDIAN PIPES Running Outlets are supplied complete with top strap and fixings

Round Outlet

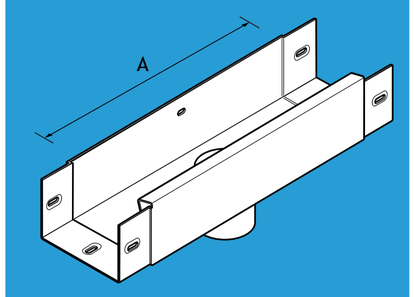

Square Outlet

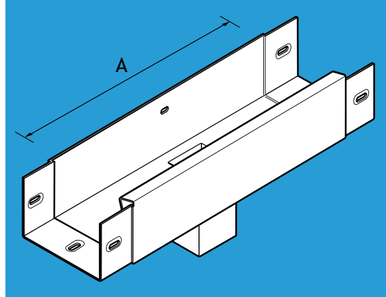

Gutter Size	Pipe Size	A	Product Code
100 x 75	63	300	GXJ1/RO25APPC
125 x 100	63	300	GXJ2/RO25APPC
150 x 100	63	300	GXJ3/RO25APPC
180 x 125	63	300	GXJ4/RO25APPC
200 x 150	63	300	GXJ5/RO25APPC
100 x 75	75	300	GXJ1/RO30APPC
125 x 100	75	300	GXJ2/RO30APPC
150 x 100	75	300	GXJ3/RO30APPC
180 x 125	75	300	GXJ4/RO30APPC
200 x 150	75	300	GXJ5/RO30APPC
125 x 100	100	300	GXJ2/RO40APPC
150 x 100	100	300	GXJ3/RO40APPC
180 x 125	100	300	GXJ4/RO40APPC
200 x 150	100	300	GXJ5/RO40APPC
100 x 75	75 x 75	300	GXJ1/SO33APPC
125 x 100	75 x 75	300	GXJ2/SO33APPC
150 x 100	75 x 75	300	GXJ3/SO33APPC
180 x 125	75 x 75	300	GXJ4/SO33APPC
200 x 150	75 x 75	300	GXJ5/SO33APPC
100 x 75	100 x 75	300	GXJ1/SO43APPC
125 x 100	100 x 75	300	GXJ2/SO43APPC
150 x 100	100 x 75	300	GXJ3/SO43APPC
180 x 125	100 x 75	300	GXJ4/SO43APPC
200 x 150	100 x 75	300	GXJ5/SO43APPC
125 x 100	100 x 100	300	GXJ2/SO44APPC
150 x 100	100 x 100	300	GXJ3/SO44APPC
180 x 125	100 x 100	300	GXJ4/SO44APPC
200 x 150	100 x 100	300	GXJ5/SO44APPC

Note: The products are available in plain mill finish or polyester powder coated using a BBA approved process. Product codes in the tables refer to the powder coated finish. For mill finish please remove the suffix PPC. Sundry items are not included as standard unless otherwise stated. Please order sundry items separately.

GX - Smooth Gutters & Fittings

Contents

GX Smooth Gutters are available in 5 sizes, together with a complete range of fittings. The range comprises soft corner radius and an inclined front wall terminating to a radiused lip, and is directly fixing to the building fabric. Polyester powder coated using the raincote range on a BBA approved process.

Notes:
All dimensions are in mm unless shown otherwise.
Gutter sizes shown are nominal.
T = gutter thickness (nominal).

Gutter Lengths

Note: Gutter lengths are supplied complete with union clip, bracket strap and fixings

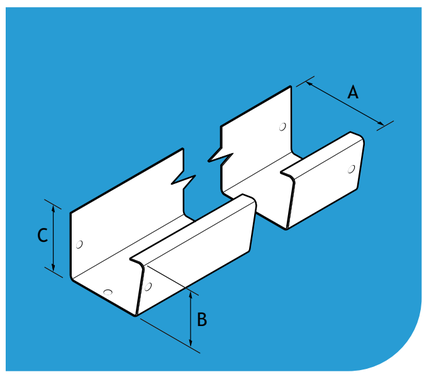

Gutter Size	Gutter Length	A	B	C	T	Product Code
120 x 75	3000	121	75	95	1.5	GXS1/3MAPPC
140 x 100	3000	140	98	119	1.5	GXS2/3MAPPC
190 x 125	3000	190	125	150	1.5	GXS3/3MAPPC
220 x 150	3000	220	150	175	1.5	GXS4/3MAPPC
225 x 150	3000	224	150	170	1.5	GXS5/3MAPPC

Union Clips

Note: Gutters & fittings are supplied with union clips included. The codes in this table are for additional items, ordered as extras

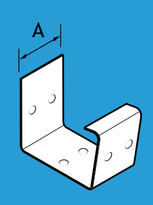

Gutter Size	A	Product Code
120 x 75	76	GXS1/UCAPPC
140 x 100	76	GXS2/UCAPPC
190 x 125	76	GXS3/UCAPPC
220 x 150	76	GXS4/UCAPPC
225 x 150	76	GXS5/UCAPPC

Bracket/Straps

Note: Gutters & fittings are supplied with bracket straps included. The codes in this table are for additional items, ordered as extras

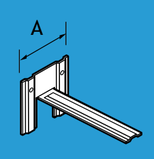

Gutter Size	A	Product Code
120 x 75	110	GXS1/BRKAPPC
140 x 100	110	GXS2/BRKAPPC
190 x 125	110	GXS3/BRKAPPC
220 x 150	110	GXS4/BRKAPPC
225 x 150	110	GXS5/BRKAPPC

Stop-Ends - Internal

Note: Stop-Ends are supplied complete with union clip and fixings

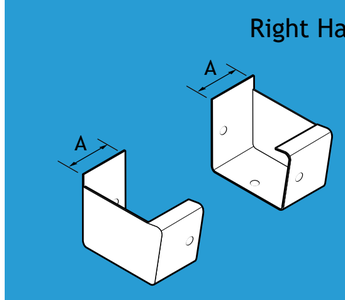

Gutter Size	Type	A	Product Code
120 x 75	Left Hand	40	GXS1/SELAPPC
140 x 100	Left Hand	40	GXS2/SELAPPC
190 x 125	Left Hand	40	GXS3/SELAPPC
220 x 150	Left Hand	40	GXS4/SELAPPC
225 x 150	Left Hand	40	GXS5/SELAPPC
120 x 75	Right Hand	40	GXS1/SERAPPC
140 x 100	Right Hand	40	GXS2/SERAPPC
190 x 125	Right Hand	40	GXS3/SERAPPC
220 x 150	Right Hand	40	GXS4/SERAPPC
225 x 150	Right Hand	40	GXS5/SERAPPC

Note: The products are available in plain mill finish or polyester powder coated using a BBA approved process. Product codes in the tables refer to the powder coated finish. For mill finish please remove the suffix PPC. Sundry items are not included as standard unless otherwise stated. Please order sundry items separately.

Contents

90º Angles

Note: Angles are supplied complete with union clip, bracket strap and fixings

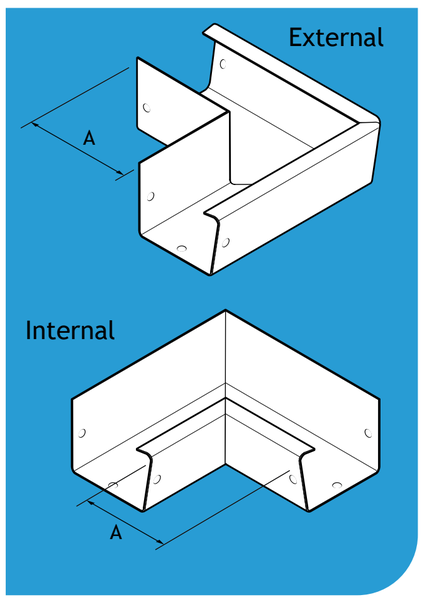

Gutter Size	Type	A	Product Code
120 x 75	External	250	GXS1/EA90APPC
140 x 100	External	250	GXS2/EA90APPC
190 x 125	External	250	GXS3/EA90APPC
220 x 150	External	250	GXS4/EA90APPC
225 x 150	External	250	GXS5/EA90APPC
120 x 75	Internal	250	GXS1/IA90APPC
140 x 100	Internal	250	GXS2/IA90APPC
190 x 125	Internal	250	GXS3/IA90APPC
220 x 150	Internal	250	GXS4/IA90APPC
225 x 150	Internal	250	GXS5/IA90APPC

135º Angles

Note: Angles are supplied complete with union clip, bracket strap and fixings

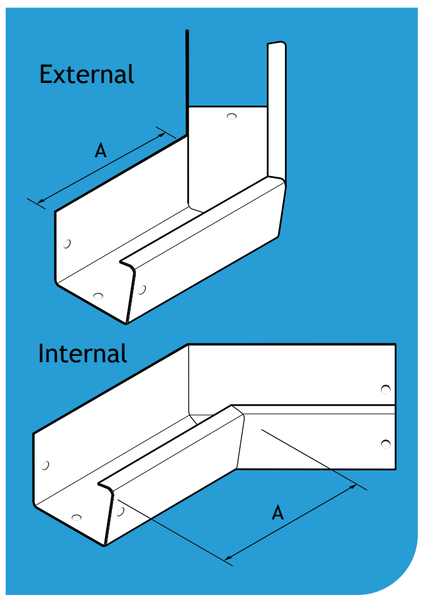

Gutter Size	Type	A	Product Code
120 x 75	External	250	GXS1/EA135APPC
140 x 100	External	250	GXS2/EA135APPC
190 x 125	External	250	GXS3/EA135APPC
220 x 150	External	250	GXS4/EA135APPC
225 x 150	External	250	GXS5/EA135APPC
120 x 75	Internal	250	GXS1/IA135APPC
140 x 100	Internal	250	GXS2/IA135APPC
190 x 125	Internal	250	GXS3/IA135APPC
220 x 150	Internal	250	GXS4/IA135APPC
225 x 150	Internal	250	GXS5/IA135APPC

Running Outlets - Standard

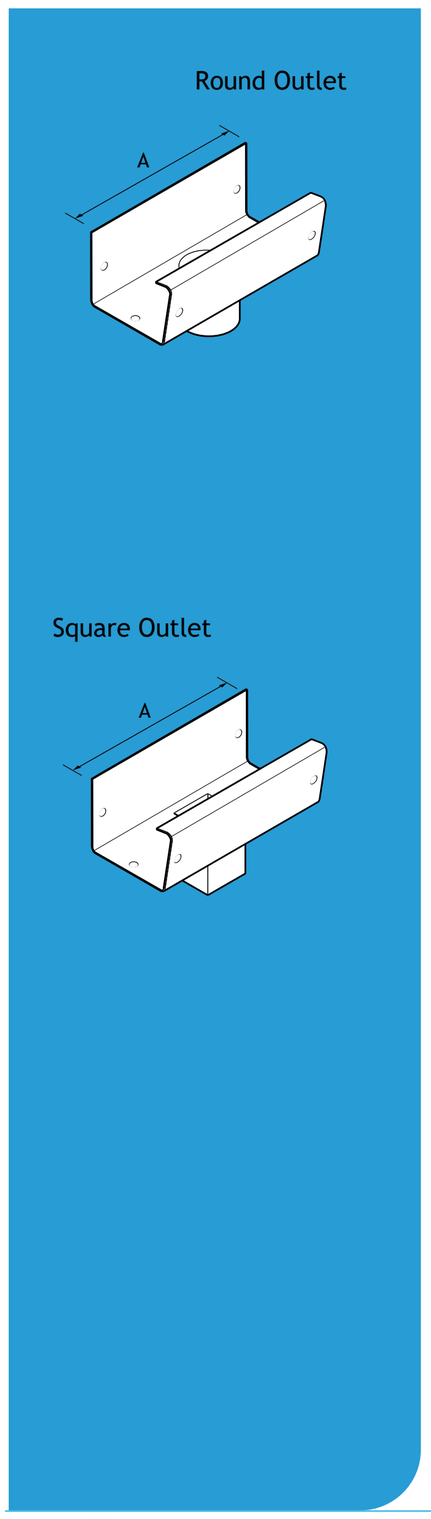

Gutter Size	Pipe Size	A	Product Code
120 x 75	63	500	GXS1/RO25APPC
140 x 100	63	500	GXS2/RO25APPC
190 x 125	63	500	GXS3/RO25APPC
220 x 150	63	500	GXS4/RO25APPC
225 x 150	63	500	GXS5/RO25APPC
120 x 75	75	500	GXS1/RO30APPC
140 x 100	75	500	GXS2/RO30APPC
190 x 125	75	500	GXS3/RO30APPC
220 x 150	75	500	GXS4/RO30APPC
225 x 150	75	500	GXS5/RO30APPC
140 x 100	100	500	GXS2/RO40APPC
190 x 125	100	500	GXS3/RO40APPC
220 x 150	100	500	GXS4/RO40APPC
225 x 150	100	500	GXS5/RO40APPC
120 x 75	75 x 75	500	GXS1/SO33APPC
140 x 100	75 x 75	500	GXS2/SO33APPC
190 x 125	75 x 75	500	GXS3/SO33APPC
220 x 150	75 x 75	500	GXS4/SO33APPC
225 x 150	75 x 75	500	GXS5/SO33APPC
120 x 75	100 x 75	500	GXS1/SO43APPC
140 x 100	100 x 75	500	GXS2/SO43APPC
190 x 125	100 x 75	500	GXS3/SO43APPC
220 x 150	100 x 75	500	GXS4/SO43APPC
225 x 150	100 x 75	500	GXS5/SO43APPC
140 x 100	100 x 100	500	GXS2/SO44APPC
190 x 125	100 x 100	500	GXS3/SO44APPC
220 x 150	100 x 100	500	GXS4/SO44APPC
225 x 150	100 x 100	500	GXS5/SO44APPC

Note: The products are available in plain mill finish or polyester powder coated using a BBA approved process. Product codes in the tables refer to the powder coated finish. For mill finish please remove the suffix PPC. Sundry items are not included as standard unless otherwise stated. Please order sundry items separately.

GX - Moulded Gutters & Fittings

Contents

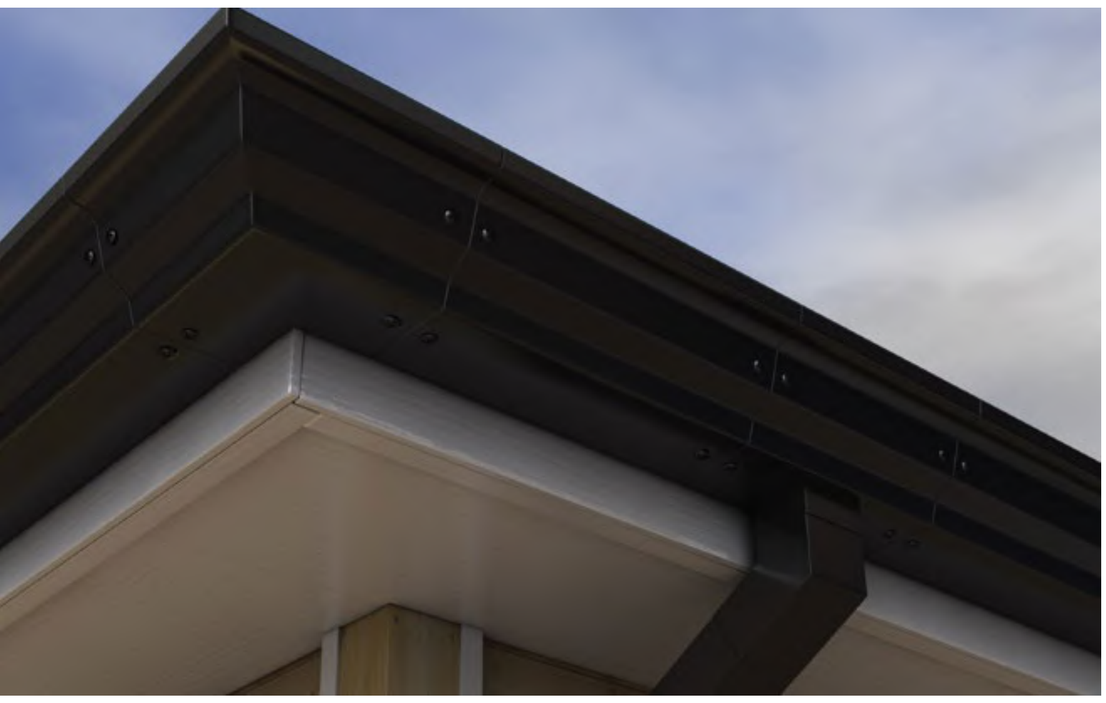

GX Moulded Gutters are available in 5 sizes, together with a complete range of fittings. In larger sizes the front wall is restrained by a top strap. The range is direct fixed to the building fabric. Polyester powder coated using the raincote range on a BBA approved process.

Notes:
The GX Moulded range does not require brackets as it is direct fixed through the vertical back at pre-drilled, 600mm centre fixing holes.
All dimensions are in mm unless shown otherwise.
Gutter sizes shown are nominal.
T = gutter thickness (nominal)

Gutter Lengths

Note: Gutter lengths are supplied complete with union clip and fixings

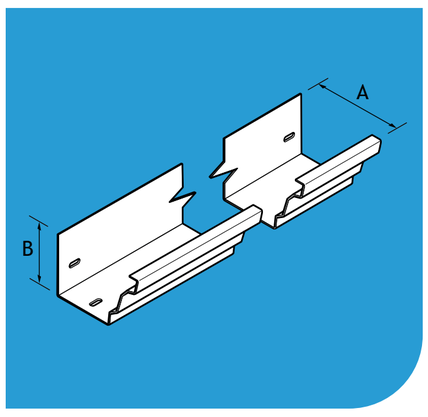

Gutter Size	Gutter Length	A	B	T	Product Code
113 x 75	3000	113	76	2	GXM1/3MAPPC
140 x 100	3000	139	102	2	GXM2/3MAPPC
160 x 100	3000	162	102	2	GXM3/3MAPPC
175 x 150	3000	175	152	3	GXM4/3MAPPC
200 x 150	3000	207	152	3	GXM5/3MAPPC

Union Clips

Note: Gutters and fittings are supplied with union clips included. The codes in this table are for additional items, ordered as extras

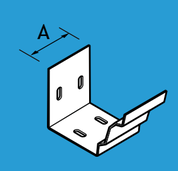

Gutter Size	A	Product Code
113 x 75	76	GXM1/UCAPPC
140 x 100	76	GXM2/UCAPPC
160 x 100	76	GXM3/UCAPPC
175 x 150	76	GXM4/UCAPPC
200 x 150	76	GXM5/UCAPPC

Stop-Ends - Internal

Note: Stop-Ends are supplied complete with fixings

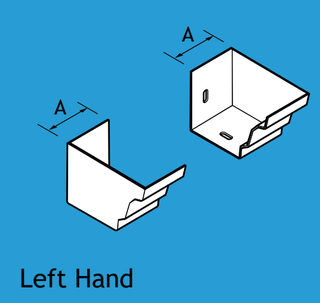

Gutter Size	Type	A	Product Code
113 x 75	Left Hand	40	GXM1/SELAPPC
140 x 100	Left Hand	40	GXM2/SELAPPC
160 x 100	Left Hand	40	GXM3/SELAPPC
175 x 150	Left Hand	40	GXM4/SELAPPC
200 x 150	Left Hand	40	GXM5/SELAPPC
113 x 75	Right Hand	40	GXM1/SERAPPC
140 x 100	Right Hand	40	GXM2/SERAPPC
160 x 100	Right Hand	40	GXM3/SERAPPC
175 x 150	Right Hand	40	GXM4/SERAPPC
200 x 150	Right Hand	40	GXM5/SERAPPC

Note: The products are available in plain mill finish or polyester powder coated using a BBA approved process. Product codes in the tables refer to the powder coated finish. For mill finish please remove the suffix PPC. Sundry items are not included as standard unless otherwise stated. Please order sundry items separately.

GX - Moulded Gutters & Fittings - Cont.

Contents

90° Angles

Note: Angles are supplied complete with union clip and fixings

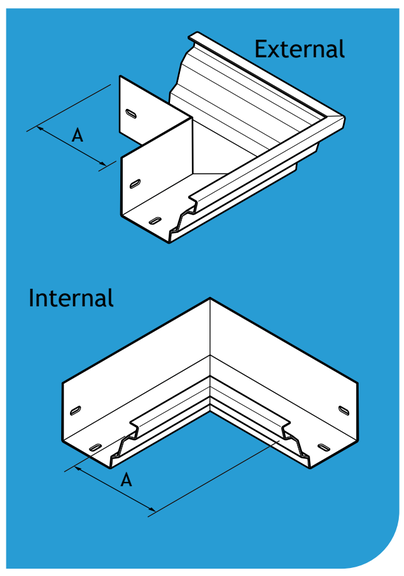

Gutter Size	Type	A	Product Code
113 x 75	External	150	GXM1/EA90APPC
140 x 100	External	150	GXM2/EA90APPC
160 x 100	External	150	GXM3/EA90APPC
175 x 150	External	150	GXM4/EA90APPC
200 x 150	External	150	GXM5/EA90APPC
113 x 75	Internal	150	GXM1/IA90APPC
140 x 100	Internal	150	GXM2/IA90APPC
160 x 100	Internal	150	GXM3/IA90APPC
175 x 150	Internal	150	GXM4/IA90APPC
200 x 150	Internal	150	GXM5/IA90APPC

135° Angles

Note: Angles are supplied complete with union clip and fixings

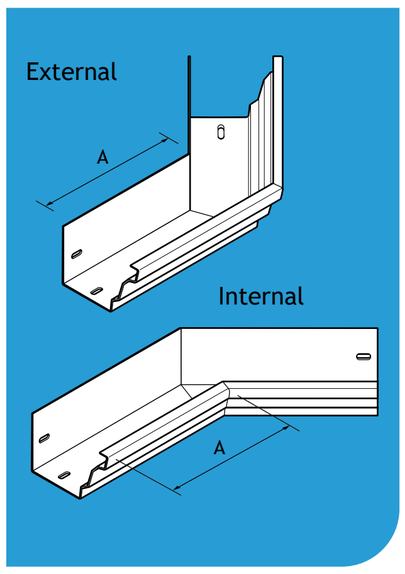

Gutter Size	Type	A	Product Code
113 x 75	External	150	GXM1/EA135APPC
140 x 100	External	150	GXM2/EA135APPC
160 x 100	External	150	GXM3/EA135APPC
175 x 150	External	150	GXM4/EA135APPC
200 x 150	External	150	GXM5/EA135APPC
113 x 75	Internal	150	GXM1/IA135APPC
140 x 100	Internal	150	GXM2/IA135APPC
160 x 100	Internal	150	GXM3/IA135APPC
175 x 150	Internal	150	GXM4/IA135APPC
200 x 150	Internal	150	GXM5/IA135APPC

Running Outlets - Standard

Note: A choice of three pipe systems is available. Product codes denote that running outlets fit to Heritage socketed aluminium pipes. ADD SUFFIX /F TO PRODUCT CODE TO FIT FLUSHJOINT OR GUARDIAN PIPES Running Outlets are supplied complete with union clip, bracket strap and fixings

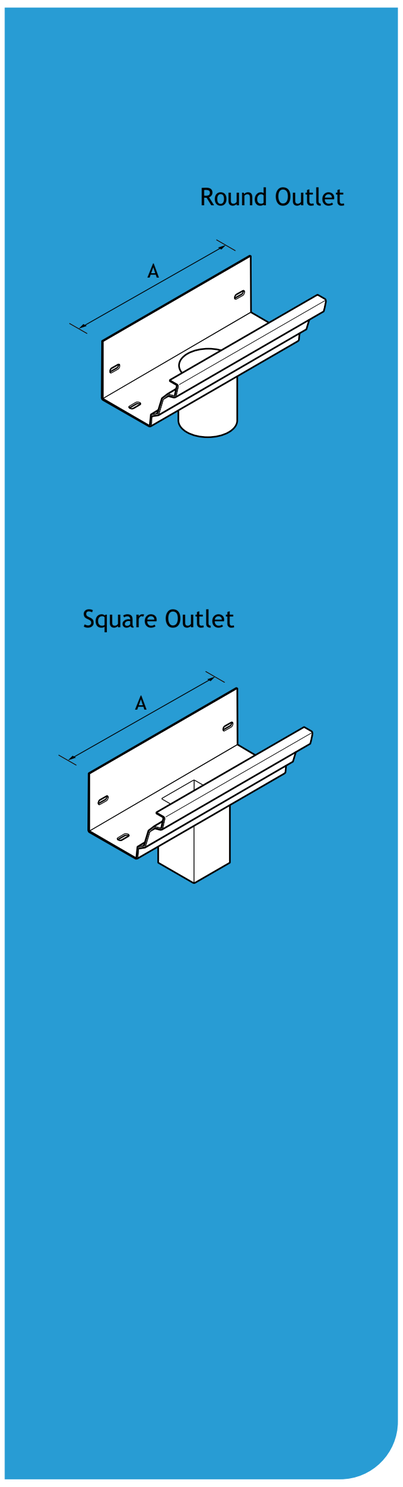

Gutter Size	Pipe Size	A	Product Code
113 x 75	63	300	GXM1/RO25APPC
140 x 100	63	300	GXM2/RO25APPC
160 x 100	63	300	GXM3/RO25APPC
175 x 150	63	300	GXM4/RO25APPC
200 x 150	63	300	GXM5/RO25APPC
113 x 75	75	300	GXM1/RO30APPC
140 x 100	75	300	GXM2/RO30APPC
160 x 100	75	300	GXM3/RO30APPC
175 x 150	75	300	GXM4/RO30APPC
200 x 150	75	300	GXM5/RO30APPC
140 x 100	100	300	GXM2/RO40APPC
160 x 100	100	300	GXM3/RO40APPC
175 x 150	100	300	GXM4/RO40APPC
200 x 150	100	300	GXM5/RO40APPC
113 x 75	75 x 75	300	GXM1/SO33APPC
140 x 100	75 x 75	300	GXM2/SO33APPC
160 x 100	75 x 75	300	GXM3/SO33APPC
175 x 150	75 x 75	300	GXM4/SO33APPC
200 x 150	75 x 75	300	GXM5/SO33APPC
113 x 75	100 x 75	300	GXM1/SO43APPC
140 x 100	100 x 75	300	GXM2/SO43APPC
160 x 100	100 x 75	300	GXM3/SO43APPC
175 x 150	100 x 75	300	GXM4/SO43APPC
200 x 150	100 x 75	300	GXM5/SO43APPC
140 x 100	100 x 100	300	GXM2/SO44APPC
160 x 100	100 x 100	300	GXM3/SO44APPC
175 x 150	100 x 100	300	GXM4/SO44APPC
200 x 150	100 x 100	300	GXM5/SO44APPC

Note: The products are available in plain mill finish or polyester powder coated using a BBA approved process. Product codes in the tables refer to the powder coated finish. For mill finish please remove the suffix PPC. Sundry items are not included as standard unless otherwise stated. Please order sundry items separately.

Flushjoint - Aluminium Downpipe System - Product Summary

A contemporary range of extruded aluminium downpipes. The Flushjoint system is based on concealed spigots which give a smooth, clean appearance that complements modern building design. The pipes are mounted on brackets to stand clear of the structure.

The Flushjoint pipework system also integrates with our prefabricated Harmer extended spigot roof outlet range, available with Flushjoint extruded aluminium downpipe spigots. Aluminium alloy is lightweight, therefore easy to handle on site and during installation.

Flushjoint - Circular Pipe

63mm dia
75mm dia
100mm dia
150mm dia

Flushjoint - Square Pipe

75 x 75 mm
100 x 100 mm

Flushjoint - Rectangular Pipe

100 x 75 mm

Applications

- Contemporary pipework system suitable for new build and refurbishment projects
- Compatible with Heritage, Aqualine and GX gutter systems
- Flushjoint is not designed for use in underground drainage or as part of a soil or waste system

Features & Performance

- Choice of circular, square and rectangular pipes
- Hidden spigot jointing arrangement used to achieve completely smooth external appearance
- Material hardness and fixing mechanisms give excellent rigidity and high impact resistance
- Lightweight, durable and non-corrodible
- Life expectancy of aluminium: 40 years (rural/suburban areas); up to 25 years (industrial/marine areas)
- Easy to handle and fix
- Aluminium is 100% recyclable

Manufacture

- UK manufactured
- Made from extruded aluminium to BS EN 12020-1:2008, BS EN 515:2017, BS EN 573-4:2004 and BS EN 755-2:2016, from grade 6063 T6 alloy

Installation & Fixing

- Flushjoint pipework is built from the gutter downwards starting with the offsets and bends
- A choice of brackets are available to give varying projections
- Brackets secure pipework with minimum visual intrusion
- Minimal maintenance requirements

Flushjoint - Circular Pipes & Fittings

Contents

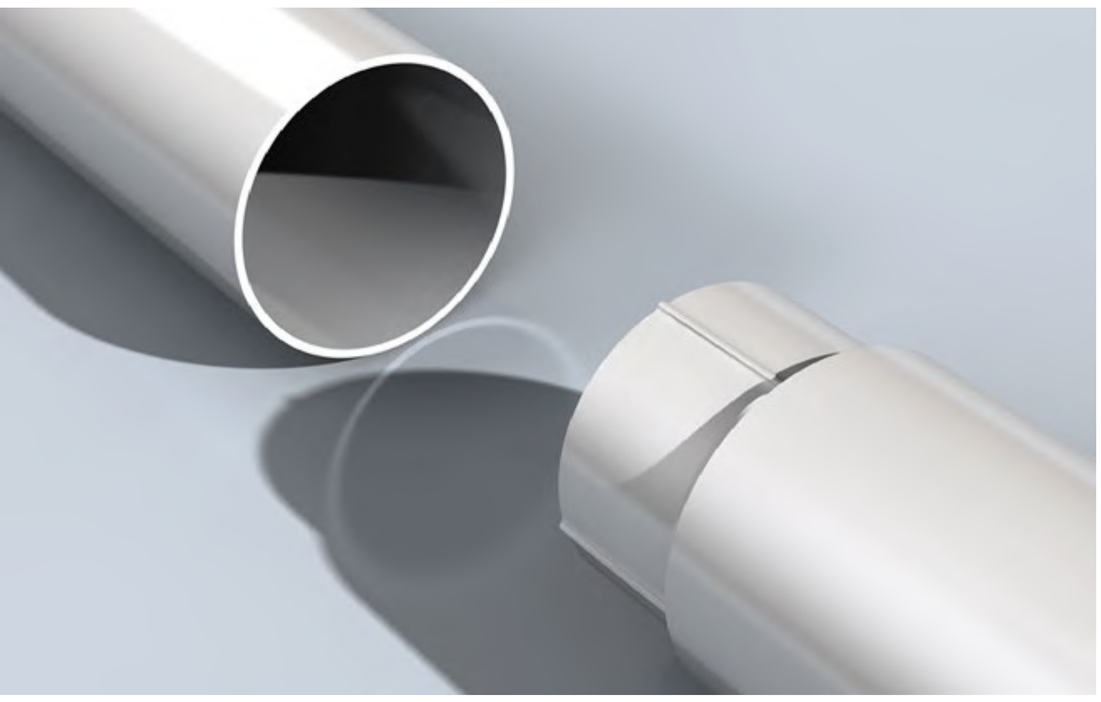

Flushjoint Circular Pipes are available in 4 sizes and 2 pipe lengths, together with a complete range of fittings. Flush spigot pipe connection for virtually undetectable joints. Factory finished in a wide range of colour choices from a BBA approved powder coating process.

Notes: Flushjoint can be used with any Alumasc Gutter System, providing the girth of the gutter is sufficient to accommodate the cross section area of the pipe. Running outlets are made to order according to choice of gutter and project requirements.

All dimensions are in mm unless shown otherwise.

Pipe sizes shown are nominal.

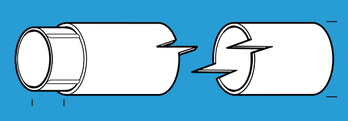

Pipes (Nominal)	63	75	100	150
P1 External Diameter	63	76.5	102	152
P2 Internal Diameter	60.5	74	98.5	147
T Thickness	1.22	1.22	1.6	2.5

Pipes

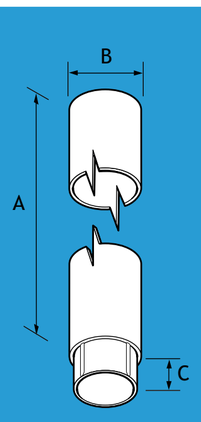

Pipe Size	Pipe Length (A)	B	C	Product Code
63	2950	63	50	CP25/3MAPPC
63	1950	63	50	CP25/2MAPPC
63	950	63	50	CP25/1MAPPC
75	2950	76.5	50	CP30/3MAPPC
75	1950	76.5	50	CP30/2MAPPC
75	950	76.5	50	CP30/1MAPPC
100	2950	102	50	CP40/3MAPPC
100	1950	102	50	CP40/2MAPPC
100	950	102	50	CP40/1MAPPC
150	2950	152	50	CP60/3MAPPC
150	1950	152	50	CP60/2MAPPC
150	950	152	50	CP60/1MAPPC

Access Pipes

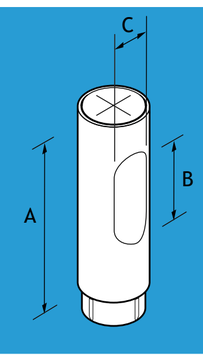

Pipe Size	A	B	C	D	Product Code
63	300	100	40	50	CP25/ACPAPPC
75	300	100	42	50	CP30/ACPAPPC
100	300	100	64	50	CP40/ACPAPPC
150	400	150	84	50	CP60/ACPAPPC

Shoes

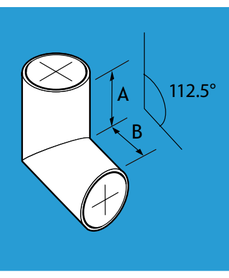

Pipe Size	A	B	Product Code
63	100	25	CP25/SHAPPC
75	100	25	CP30/SHAPPC
100	100	25	CP40/SHAPPC
150	125	30	CP60/SHAPPC

Note: The products are available in plain mill finish or polyester powder coated using a BBA approved process. Product codes in the tables refer to the powder coated finish. For mill finish please remove the suffix PPC. Sundry items are not included as standard unless otherwise stated. Please order sundry items separately.

Contents

Bends

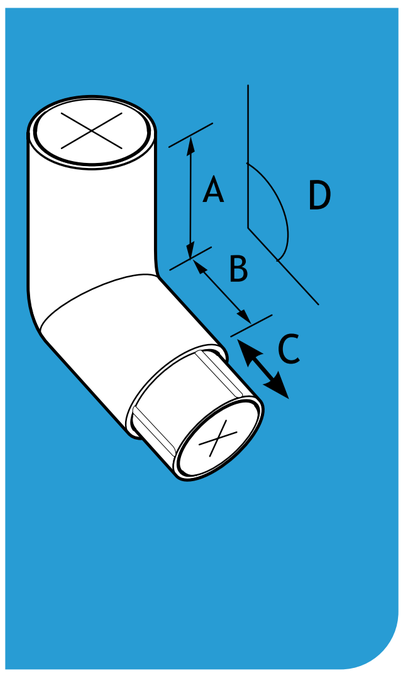

Pipe Size	D	A	B	Product Code
63	92.5 Degree	100	100	CP25/B/92APPC
75	92.5 Degree	100	100	CP30/B/92APPC
100	92.5 Degree	100	100	CP40/B/92APPC
150	92.5 Degree	100	100	CP60/B/92APPC
63	112.5 Degree	100	100	CP25/B/112APPC
75	112.5 Degree	100	100	CP30/B/112APPC
100	112.5 Degree	100	100	CP40/B/112APPC
150	112.5 Degree	100	100	CP60/B/112APPC
63	135 Degree	100	100	CP25/B/135APPC
75	135 Degree	100	100	CP30/B/135APPC
100	135 Degree	100	100	CP40/B/135APPC
150	135 Degree	100	100	CP60/B/135APPC

Branches

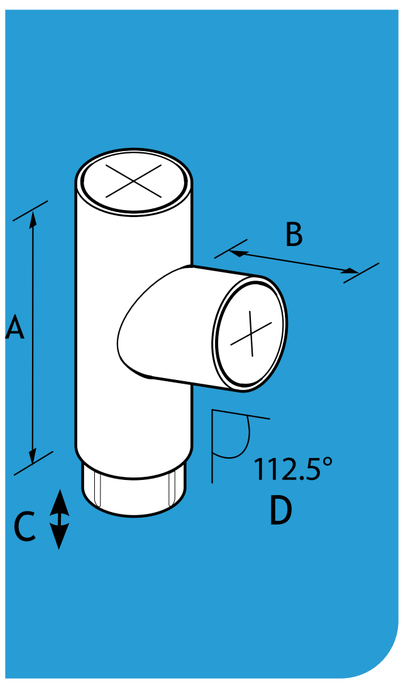

Pipe Size	D	A	B	Product Code
63	92.5 Degree	300	100	CP25/BR/92APPC
75	92.5 Degree	300	100	CP30/BR/92APPC
100	92.5 Degree	300	100	CP40/BR/92APPC
150	92.5 Degree	400	150	CP60/BR/92APPC
63	112.5 Degree	300	100	CP25/BR/112APPC
75	112.5 Degree	300	100	CP30/BR/112APPC
100	112.5 Degree	300	100	CP40/BR/112APPC
150	112.5 Degree	400	150	CP60/BR/112APPC
63	135 Degree	300	100	CP25/BR/135APPC
75	135 Degree	300	100	CP30/BR/135APPC
100	135 Degree	300	100	CP40/BR/135APPC
150	135 Degree	400	150	CP60/BR/135APPC

92.5° Two Part Offsets

Note: Can be cut on site, min and max dimensions below

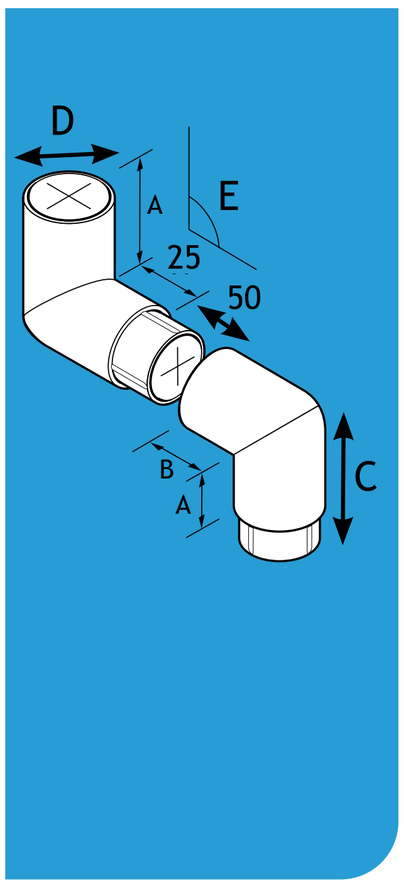

Pipe Size	Offset	A	B	MAX	MIN	Product Code
63	250	100	250	410	200	CP25/250/92APPC
63	500	100	500	641	200	CP25/500/92APPC
63	750	100	750	872	200	CP25/750/92APPC
63	1000	100	1000	1103	200	CP25/1000/92APPC
75	250	100	250	422	213	CP30/250/92APPC
75	500	100	500	653	213	CP30/500/92APPC
75	750	100	750	884	213	CP30/750/92APPC
75	1000	100	1000	1172	213	CP30/1000/92APPC
100	250	100	250	447	237	CP40/250/92APPC
100	500	100	500	697	237	CP40/500/92APPC
100	750	100	750	946	237	CP40/750/92APPC
100	1000	100	1000	1196	237	CP40/1000/92APPC
150	250	100	250	495	285	CP60/250/92APPC
150	500	100	500	744	285	CP60/500/92APPC
150	750	100	750	944	285	CP60/750/92APPC
150	1000	100	1000	1244	285	CP60/1000/92APPC

Note: The products are available in plain mill finish or polyester powder coated using a BBA approved process. Product codes in the tables refer to the powder coated finish. For mill finish please remove the suffix PPC. Sundry items are not included as standard unless otherwise stated. Please order sundry items separately.

Contents

112.5º Two Part Offsets

Note: Can be cut on site, min and max dimensions below

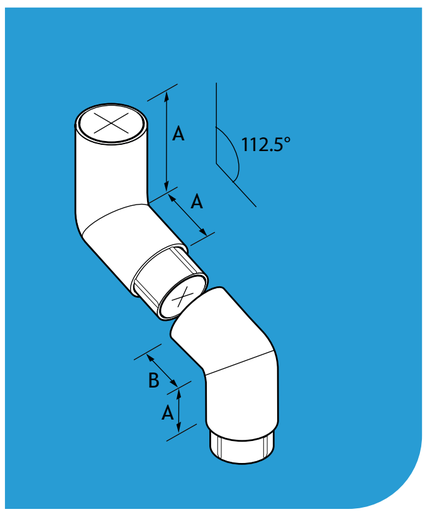

Pipe Size	Offset	A	B	MAX	MIN	Product Code
63	250	100	250	362	168	CP25/250/112APPC
63	500	100	500	593	168	CP25/500/112APPC
63	750	100	750	824	168	CP25/750/112APPC
63	1000	100	1000	1055	168	CP25/1000/112APPC
75	250	100	250	370	175	CP30/250/112APPC
75	500	100	500	601	175	CP30/500/112APPC
75	750	100	750	832	175	CP30/750/112APPC
75	1000	100	1000	1063	175	CP30/1000/112APPC
100	250	100	250	386	191	CP40/250/112APPC
100	500	100	500	617	191	CP40/500/112APPC
100	750	100	750	848	191	CP40/750/112APPC
100	1000	100	1000	1079	191	CP40/1000/112APPC
150	250	100	250	417	221	CP60/250/112APPC
150	500	100	500	648	221	CP60/500/112APPC
150	750	100	750	879	221	CP60/750/112APPC
150	1000	100	1000	1110	221	CP60/1000/112APPC

135º Two Part Offsets

Note: Can be cut on site, min and max dimensions below

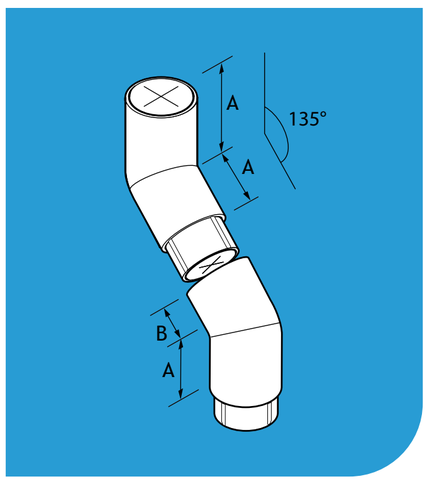

Pipe Size	Offset	A	B	MAX	MIN	Product Code
63	250	100	250	266	117	CP25/250/135APPC
63	500	100	500	442	117	CP25/500/135APPC
63	750	100	750	620	117	CP25/750/135APPC
63	1000	100	1000	798	117	CP25/1000/135APPC
75	250	100	250	269	120	CP30/250/135APPC
75	500	100	500	446	120	CP30/500/135APPC
75	750	100	750	623	120	CP30/750/135APPC
75	1000	100	1000	800	120	CP30/1000/135APPC
100	250	100	250	277	128	CP40/250/135APPC
100	500	100	500	454	128	CP40/500/135APPC
100	750	100	750	630	128	CP40/750/135APPC
100	1000	100	1000	807	128	CP40/1000/135APPC
150	250	100	250	292	143	CP60/250/135APPC
150	500	100	500	469	143	CP60/500/135APPC
150	750	100	750	645	143	CP60/750/135APPC
150	1000	100	1000	822	143	CP60/1000/135APPC

135º Fixed Offsets

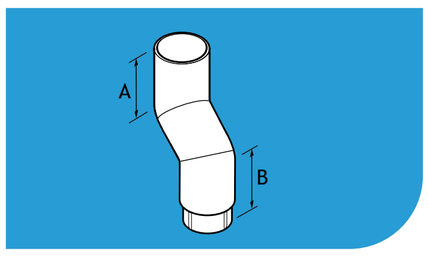

Pipe Size	Offset	A	B	Product Code
63	75	100	100	CP25/75/135APPC
75	75	100	100	CP30/75/135APPC
100	75	100	100	CP40/75/135APPC

Loose Spigots

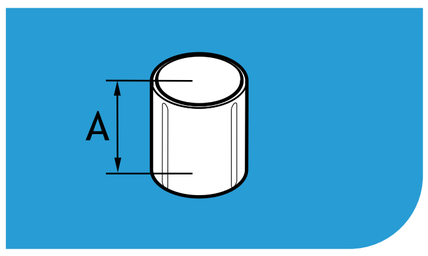

Pipe Size	A	Product Code
63	100	RW1/SPIG/100PPC
75	100	RW2/SPIG/100PPC
100	100	RW3/SPIG/100PPC

Note: The products are available in plain mill finish or polyester powder coated using a BBA approved process. Product codes in the tables refer to the powder coated finish. For mill finish please remove the suffix PPC. Sundry items are not included as standard unless otherwise stated. Please order sundry items separately.

Contents

Standard Base Clips

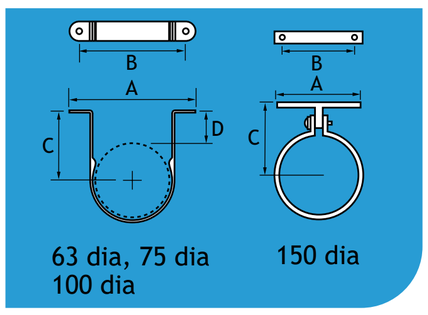

Pipe Size	A	B	C	D	Product Code
63	124	100	65	33.5	RW1/236PPC
75	137	112	71	33	RW2/237PPC
100	163	138	90	39	RW3/238PPC
150	255	215	121		RW60/PCPPC

Extended Base Clips

Note: Dimension C can be cut on site, min and max dimensions below

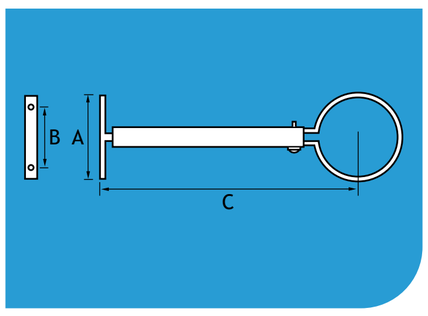

Pipe Size	A	B	C	Product Code
63	87	47	279	RW1/364PPC
75	87	47	285	RW2/365PPC
100	87	47	304	RW3/366PPC

Small Base Clips

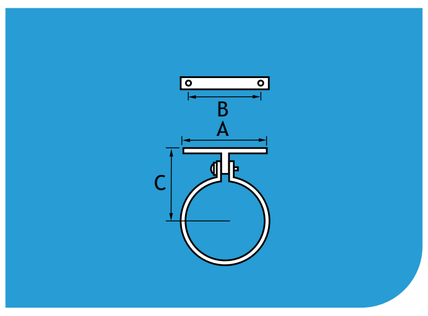

Pipe Size	A	B	C	Product Code
63	87	47	74	RW1/SB/PCPPC
75	87	47	80	RW2/SB/PCPPC
100	87	47	92	RW3/SB/PCPPC

Contemporary Rainwater Heads

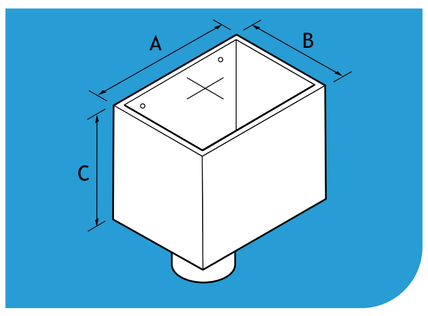

Pipe Size	A	B	C	Product Code
63	250	180	200	CP25/HOPPPC
75	250	180	200	CP30/HOPPPC
100	250	180	200	CP40/HOPPPC

Note: Traditional design hopper heads can also be used if desired.
The spigot position is suited to a standard pipe clip. If a small base pipe clip is required please state this at point of ordering, so that the hopper can be fabricated to suit.

Note: The products are available in plain mill finish or polyester powder coated using a BBA approved process. Product codes in the tables refer to the powder coated finish. For mill finish please remove the suffix PPC. Sundry items are not included as standard unless otherwise stated. Please order sundry items separately.

Flushjoint - Square & Rectangular Pipes & Fittings

Contents

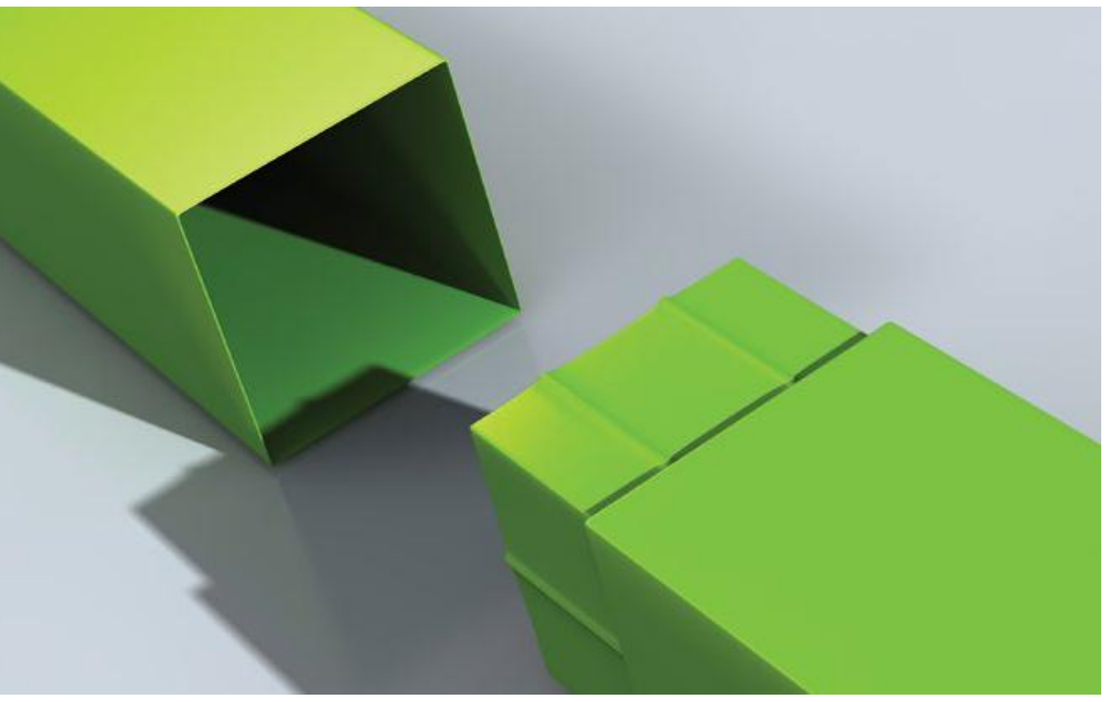

Flushjoint Square and Rectangular Pipes are available in 3 sizes and 2 pipe lengths, together with a complete range of fittings. Flush spigot pipe connection for virtually undetectable joints. Polyester powder coated using the raincote range on a BBA approved process.

Notes: Flushjoint can be used with any Alumasc Gutter System, providing the girth of the gutter is sufficient to accommodate the cross section area of the pipe. Running outlets are made to order according to choice of gutter and project requirements.

All dimensions are in mm unless shown otherwise.

Pipe sizes shown are nominal.

Pipes (Nominal)	75 x 75	100 x 75	100 x 100
P1 External Diameter	72 x 72	102 x 76	102 x 102
P2 Internal Diameter	68 x 68	98 x 72	97 x 97
T Thickness	2.0	2.0	2.5

Pipes

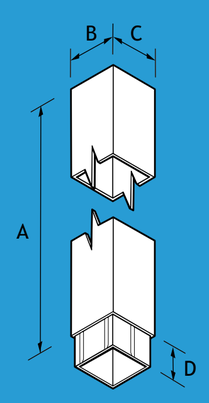

Pipe Size	Pipe Length (A)	B		C		D		Product Code
75 x 75	2950	72		72		40		CP33/3MAPPC
75 x 75	1950	72		72		40		CP33/2MAPPC
75 x 75	950	72		72		40		CP33/1MAPPC
100 x 75	2950	102		76		40		CP43/3MAPPC
100 x 75	1950	102		76		40		CP43/2MAPPC
100 x 75	950	102		76		40		CP43/1MAPPC
100 x 100	2950	102		102		40		CP44/3MAPPC
100 x 100	1950	102		102		40		CP44/2MAPPC
100 x 100	950	102		102		40		CP44/1MAPPC

Access Pipes

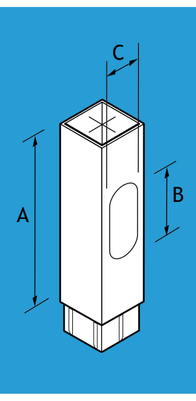

Pipe Size	A	B	C	Product Code
75 x 75	300	150	60	CP33/ACPAPPC
100 x 75	300	150	75	CP43/ACPAPPC
100 x 100	300	150	75	CP44/ACPAPPC

Note: The products are available in plain mill finish or polyester powder coated using a BBA approved process. Product codes in the tables refer to the powder coated finish. For mill finish please remove the suffix PPC. Sundry items are not included as standard unless otherwise stated. Please order sundry items separately.

Flushjoint - Square & Rectangular Pipes & Fittings - Cont.

Contents

Shoe

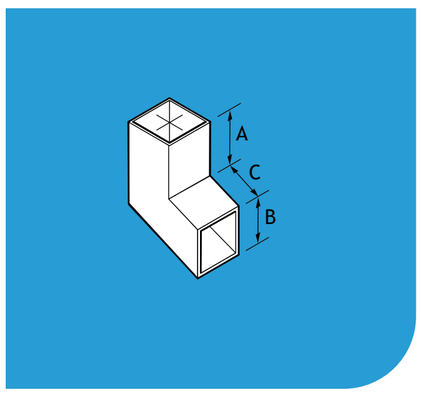

Pipe Size	A	B	C	Product Code
75 x 75	100	55	25	CP33/SHAPPC
100 x 75	100	70	25	CP43/SHAPPC
100 x 100	100	70	25	CP44/SHAPPC

Bends

Note: CP43 bends and branches are left and right handed as standard, front or back bends or branches are available on request

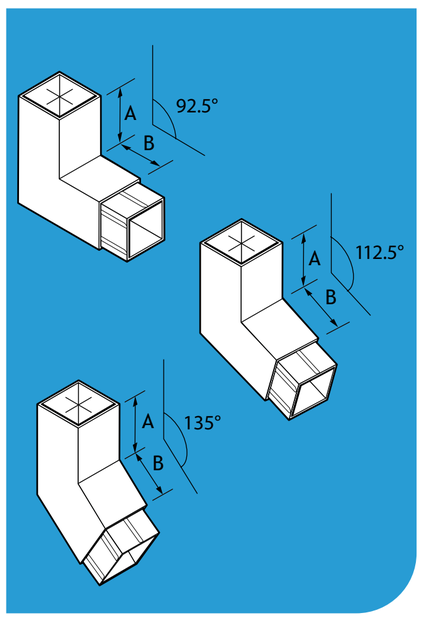

Pipe Size	Type	A	B	Product Code
75 x 75	92.5 Degree	100	100	CP33/B/92APPC
100 x 75	92.5 Degree	100	100	CP43/B/92APPC
100 x 100	92.5 Degree	100	100	CP44/B/92APPC
75 x 75	112.5 Degree	100	100	CP33/B/112APPC
100 x 75	112.5 Degree	100	100	CP43/B/112APPC
100 x 100	112.5 Degree	100	100	CP44/B/112APPC
75 x 75	135 Degree	100	100	CP33/B/135APPC
100 x 75	135 Degree	100	100	CP43/B/135APPC
100 x 100	135 Degree	100	100	CP44/B/135APPC

Branches

Note: CP43 bends and branches are left and right handed as standard, front or back bends or branches are available on request

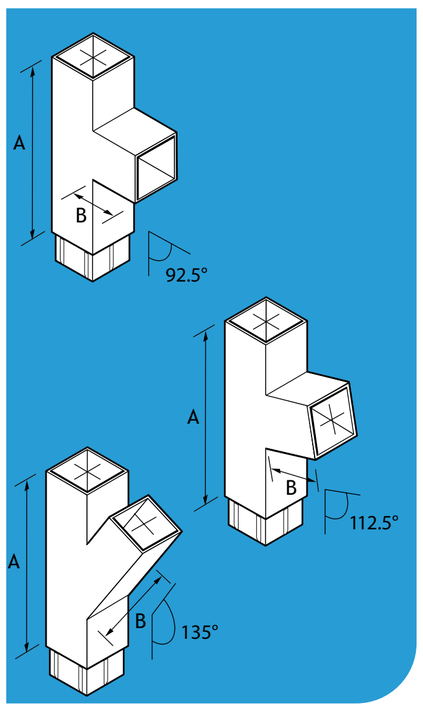

Pipe Size	Type	A	B	Product Code
75 x 75	92.5 Degree	300	100	CP33/BR/92APPC
100 x 75	92.5 Degree	300	100	CP43/BR/92APPC
100 x 100	92.5 Degree	300	100	CP44/BR/92APPC
75 x 75	112.5 Degree	300	100	CP33/BR/112APPC
100 x 75	112.5 Degree	300	100	CP43/BR/112APPC
100 x 100	112.5 Degree	300	100	CP44/BR/112APPC
75 x 75	135 Degree	300	100	CP33/BR/135APPC
100 x 75	135 Degree	300	100	CP43/BR/135APPC
100 x 100	135 Degree	300	100	CP44/BR/135APPC

92.5° Two Part Offsets

Note: Can be cut on site, min and max dimensions below

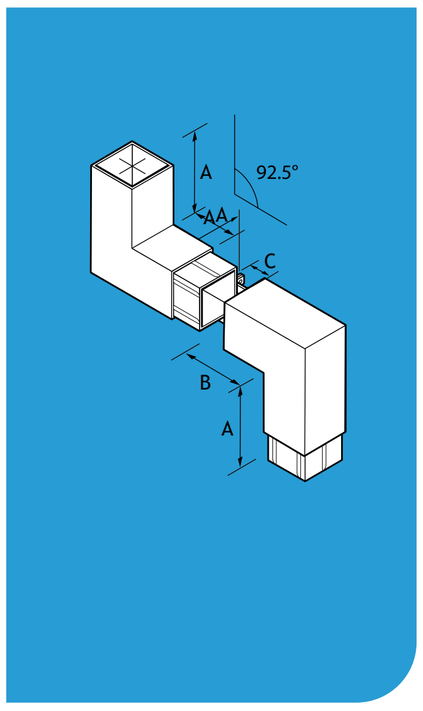

Pipe Size	Offset	A	B	MAX	MIN	Product Code
75 x 75	250	100	250	422	210	CP33/250/92APPC
75 x 75	500	100	500	672	210	CP33/500/92APPC
75 x 75	750	100	750	922	210	CP33/750/92APPC
75 x 75	1000	100	1000	1171	210	CP33/1000/92APPC
100 x 75	250	100	250	422	210	CP43/250/92APPC
100 x 75	500	100	500	672	210	CP43/500/92APPC
100 x 75	750	100	750	922	210	CP43/750/92APPC
100 x 75	1000	100	1000	1171	210	CP43/1000/92APPC
100 x 100	250	100	250	447	235	CP44/250/92APPC
100 x 100	500	100	500	697	235	CP44/500/92APPC
100 x 100	750	100	750	946	235	CP44/750/92APPC
100 x 100	1000	100	1000	1196	235	CP44/1000/92APPC

Note: The products are available in plain mill finish or polyester powder coated using a BBA approved process. Product codes in the tables refer to the powder coated finish. For mill finish please remove the suffix PPC. Sundry items are not included as standard unless otherwise stated. Please order sundry items separately.

112.5° Two Part Offsets

Note: Can be cut on site, min and max dimensions below

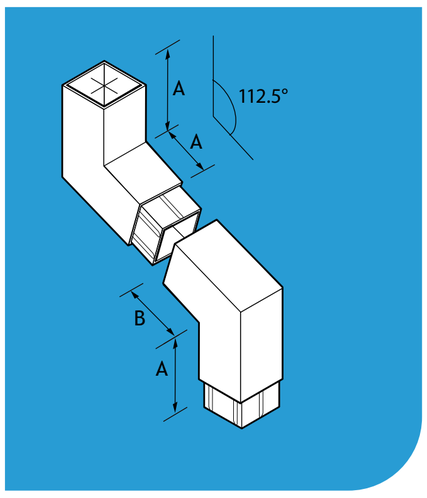

Pipe Size	Offset	A	B	MAX	MIN	Product Code
75 x 75	250	100	250	370	175	CP33/250/112APPC
75 x 75	500	100	500	601	175	CP33/500/112APPC
75 x 75	750	100	750	832	175	CP33/750/112APPC
75 x 75	1000	100	1000	1063	175	CP33/1000/112APPC
100 x 75	250	100	250	370	175	CP43/250/112APPC
100 x 75	500	100	500	601	175	CP43/500/112APPC
100 x 75	750	100	750	832	175	CP43/750/112APPC
100 x 75	1000	100	1000	1063	175	CP43/1000/112APPC
100 x 100	250	100	250	386	191	CP44/250/112APPC
100 x 100	500	100	500	617	191	CP44/500/112APPC
100 x 100	750	100	750	848	191	CP44/750/112APPC
100 x 100	1000	100	1000	1079	191	CP44/1000/112APPC

135° Two Part Offsets

Note: Can be cut on site, min and max dimensions below

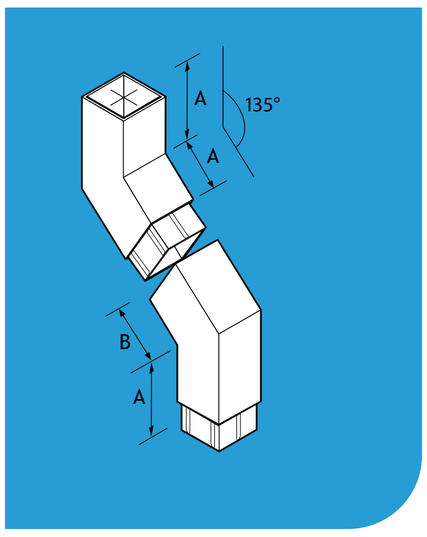

Pipe Size	Offset	A	B	MAX	MIN	Product Code
75 x 75	250	100	250	269	120	CP33/250/135APPC
75 x 75	500	100	500	445	120	CP33/500/135APPC
75 x 75	750	100	750	622	120	CP33/750/135APPC
75 x 75	1000	100	1000	799	120	CP33/1000/135APPC
100 x 75	250	100	250	269	120	CP43/250/135APPC
100 x 75	500	100	500	445	120	CP43/500/135APPC
100 x 75	750	100	750	622	120	CP43/750/135APPC
100 x 75	1000	100	1000	799	120	CP43/1000/135APPC
100 x 100	250	100	250	277	128	CP44/250/135APPC
100 x 100	500	100	500	454	128	CP44/500/135APPC
100 x 100	750	100	750	630	128	CP44/750/135APPC
100 x 100	1000	100	1000	807	128	CP44/1000/135APPC

135° Fixed Offsets

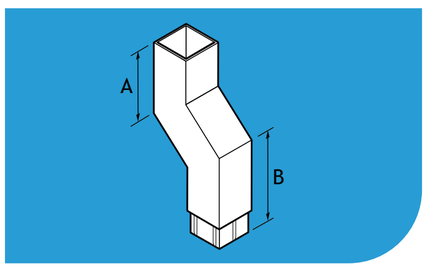

Pipe Size	Offset	A	B	Product Code
75 x 75	75	100	100	CP33/75/135APPC
100 x 75	75	100	100	CP43/75/135APPC
100 x 100	75	100	100	CP44/75/135APPC

Loose Spigots

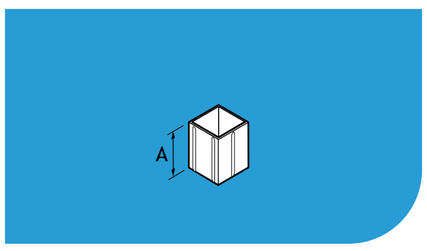

Pipe Size	A	Product Code
75 x 75	100	RW33/SPIG/100PPC
100 x 75	100	RW43/SPIG/100PPC
100 x 100	100	RW44/SPIG/100PPC

Note: The products are available in plain mill finish or polyester powder coated using a BBA approved process. Product codes in the tables refer to the powder coated finish. For mill finish please remove the suffix PPC. Sundry items are not included as standard unless otherwise stated. Please order sundry items separately.

Flushjoint - Square & Rectangular Pipes & Fittings - Cont.

Standard Base Clips

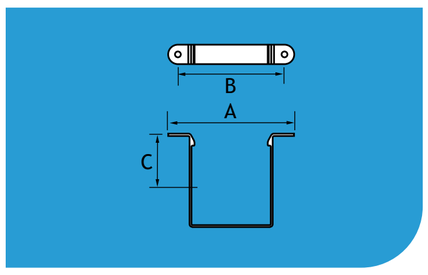

Pipe Size	A	B	C	Product Code
75 x 75	133	109	52	RW33/PCPPC
100 x 75	163	138	54	RW43/PCPPC
100 x 100	163	138	67	RW44/PCPPC

Extended Base Clips

Note: Dimension C can be cut on site, min and max dimensions below

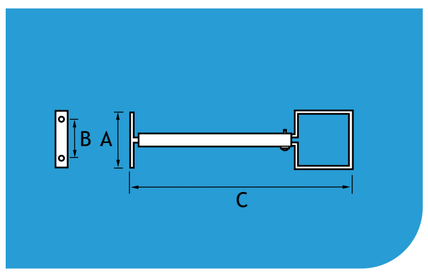

Pipe Size	A	B	C	Product Code
75 x 75	84	47	290	RW33/EX/PCPPC
100 x 75	84	47	292	RW43/EX/PCPPC
100 x 100	84	47	305	RW44/EX/PCPPC

Small Base Clips

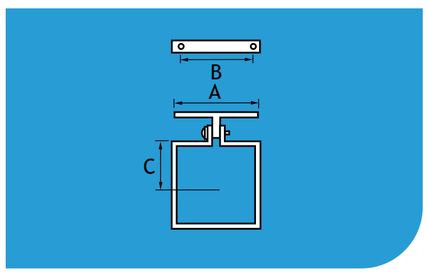

Pipe Size	A	B	C	Product Code
75 x 75	84	47	78	RW33/SB/PCPPC
100 x 75	84	47	80	RW43/SB/PCPPC
100 x 100	84	47	94	RW44/SB/PCPPC

Contemporary Rainwater Heads

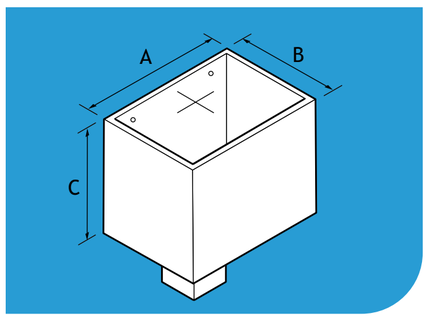

Pipe Size	A	B	C	Product Code
75 x 75	250	180	200	CP33/HOPPPC
100 x 75	250	180	200	CP43/HOPPPC
100 x 100	250	180	200	CP44/HOPPPC

Note: Traditional design hopper heads can also be used if desired.
The spigot position is suited to a standard pipe clip. If a small base pipe clip is required please state this at point of ordering, so that the hopper can be fabricated to suit.
Please refer to sections of this brochure covering Heritage Pipes and Fittings.

Note: The products are available in plain mill finish or polyester powder coated using a BBA approved process. Product codes in the tables refer to the powder coated finish. For mill finish please remove the suffix PPC. Sundry items are not included as standard unless otherwise stated. Please order sundry items separately.

Swaged - Aluminium Downpipe System - Product Summary

Swaged Extruded Aluminium Downpipe system offers an economical metal downpipe system, available in circular pipes in a choice of three sizes.

Swaged - Circular Pipe

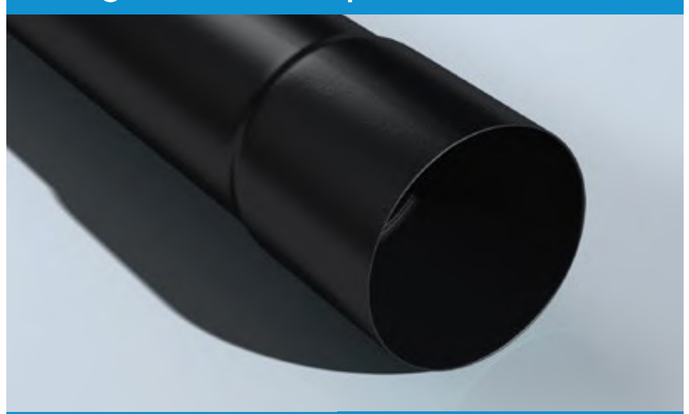

63mm dia
75mm dia
100mm dia

Applications

- Contemporary pipework system suitable for both new build and refurbishment projects
- Compatible with the AX extruded aluminium gutter range
- Long-life alternative to uPVC gutters

Features & Performance

- Circular downpipe, in a choice of three sizes
- Expanded pipe end to create an integral connection
- Lightweight, durable and non-corrodible
- Material hardness and fixing mechanisms give excellent rigidity and high impact resistance
- Life expectancy of aluminium: 40 years (rural/suburban areas); up to 25 years (industrial/marine areas)
- Easy to handle and fix
- Aluminum is 100% recyclable

Manufacture

- UK manufactured
- Made from extruded aluminium to BS EN 12020:2001, BS EN 515:1993, BS EN 573:1995 and BS EN 755, from grade 6063 T6 alloy.

Installation & Fixing

- Swaged pipework is built from the gutter downwards starting with the offset
- Standard pipe clips can be used to fix the pipework to the building façade
- Minimal maintenance requirements

Swaged - Circular Pipes & Fittings

Contents

Swaged Circular Downpipes are available in a choice of three diameters and a complete range of fittings. The expanded pipe end creates an integral connection. Polyester powder coated using the raincote range on a BBA approved process.

Notes: All dimensions are in mm unless shown otherwise.
Pipe sizes shown are nominal.

Pipes (Nominal)	63	75	100	150
P1 External Diameter	63	76.5	102	152
P2 Internal Diameter	60.5	74	98.5	147
T Thickness	1.22	1.22	1.6	2.5

Pipes

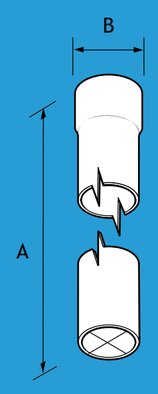

Pipe Size	Pipe Length (A)	B	Product Code
63	3000	63	SW25/3MPPC
63	2000	63	SW25/2MPPC
63	1000	63	SW25/1MPPC
75	3000	75	SW30/3MPPC
75	2000	75	SW30/2MPPC
75	1000	75	SW30/1MPPC
100	3000	100	SW40/3MPPC
100	2000	100	SW40/2MPPC
100	1000	100	SW40/1MPPC

Access Pipes

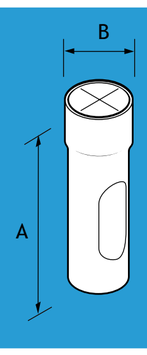

Pipe Size	A	B	Product Code
63	300	63	SW25/ACPPPC
75	300	75	SW30/ACPPPC
100	300	100	SW40/ACPPPC

Note: The products are available in plain mill finish or polyester powder coated using a BBA approved process. Product codes in the tables refer to the powder coated finish. For mill finish please remove the suffix PPC. Sundry items are not included as standard unless otherwise stated. Please order sundry items separately.

Swaged - Circular Pipes & Fittings - Cont.

Contents

Shoes

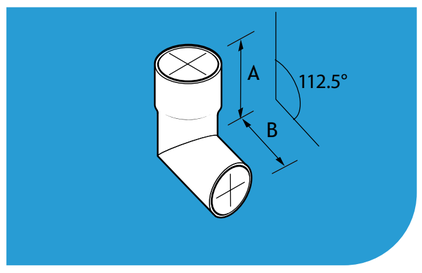

Pipe Size	A	B	Product Code
63	100	25	SW25/SHPPC
75	100	25	SW30/SHPPC
100	100	25	SW40/SHPPC

Bends

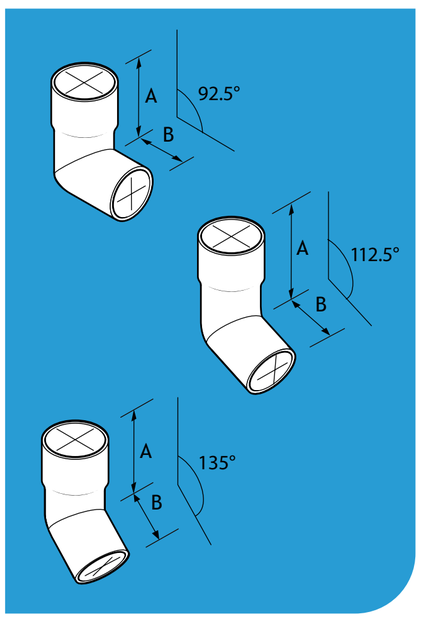

Pipe Size	Type	A	B	Product Code
63	92.5 Degree	100	100	SW25/B/92PPC
75	92.5 Degree	100	100	SW30/B/92PPC
100	92.5 Degree	100	100	SW40/B/92PPC
63	112.5 Degree	100	100	SW25/B/112PPC
75	112.5 Degree	100	100	SW30/B/112PPC
100	112.5 Degree	100	100	SW40/B/112PPC
63	135 Degree	100	100	SW25/B/135PPC
75	135 Degree	100	100	SW30/B/135PPC
100	135 Degree	100	100	SW40/B/135PPC

Branches

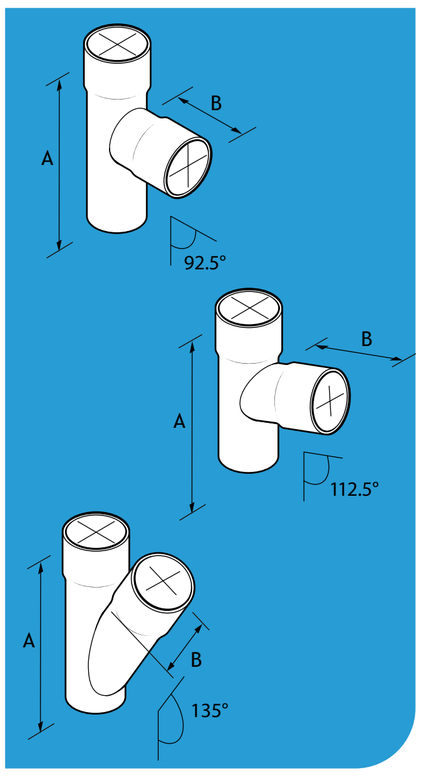

Pipe Size	Type	A	B	Product Code
63	92.5 Degree	300	100	SW25/BR/92PPC
75	92.5 Degree	300	100	SW30/BR/92PPC
100	92.5 Degree	300	100	SW40/BR/92PPC
63	112.5 Degree	300	100	SW25/BR/112PPC
75	112.5 Degree	300	100	SW30/BR/112PPC
100	112.5 Degree	300	100	SW40/BR/112PPC
63	135 Degree	300	100	SW25/BR/135PPC
75	135 Degree	300	100	SW30/BR/135PPC
100	135 Degree	300	100	SW40/BR/135PPC

Double Branches

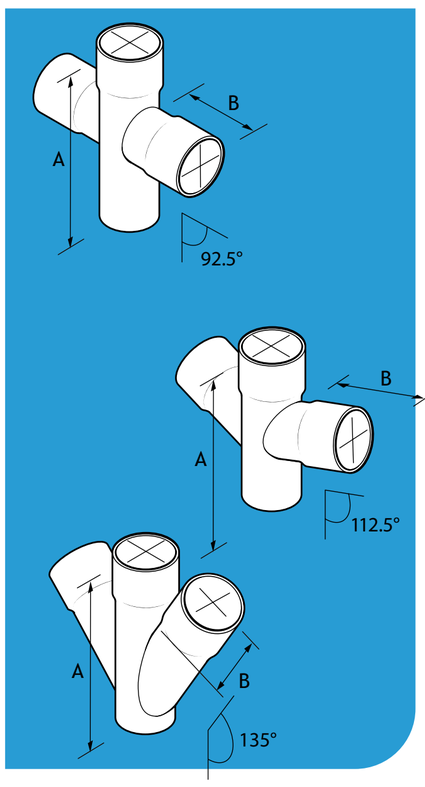

Pipe Size	Type	A	B	Product Code
63	92.5 Degree	300	100	SW25/DBR/92PPC
75	92.5 Degree	300	100	SW30/DBR/92PPC
100	92.5 Degree	300	100	SW40/DBR/92PPC
63	112.5 Degree	300	100	SW25/DBR/112PPC
75	112.5 Degree	300	100	SW30/DBR/112PPC
100	112.5 Degree	300	100	SW40/DBR/112PPC
63	135 Degree	300	100	SW25/DBR/135PPC
75	135 Degree	300	100	SW30/DBR/135PPC
100	135 Degree	300	100	SW40/DBR/135PPC

Note: The products are available in plain mill finish or polyester powder coated using a BBA approved process. Product codes in the tables refer to the powder coated finish. For mill finish please remove the suffix PPC. Sundry items are not included as standard unless otherwise stated. Please order sundry items separately.

Contents

112.5° Fixed Offsets

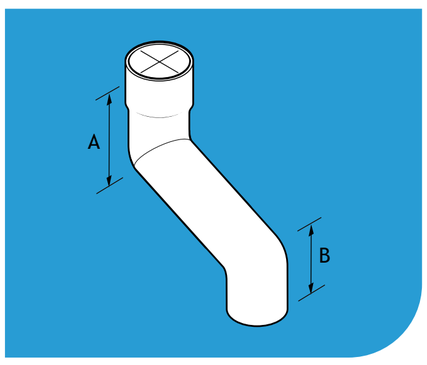

Pipe Size	Offset	A	B	Product Code
63	75	100	100	SW25/FOPPC
75	75	100	100	SW30/FOPPC
100	75	100	100	SW40/FOPPC

112.5° Two Part Offsets

Note: Can be cut on site, min and max dimensions below

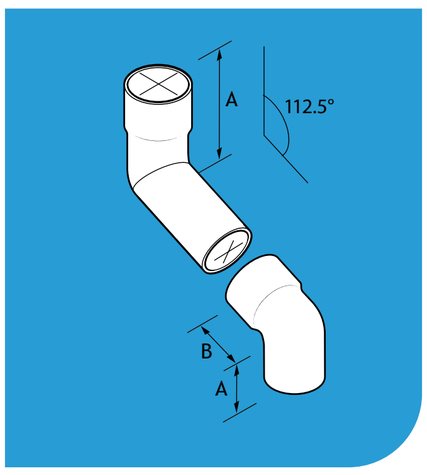

Pipe Size	Offset	A	B	MAX	MIN	Product Code
63	250	100	100	306	135	SW25/TPO/250PPC
63	500	100	100	535	135	SW25/TPO/500PPC
63	750	100	100	768	135	SW25/TPO/750PPC
63	1000	100	100	1000	135	SW25/TPO/1000PPC
75	250	100	100	315	150	SW30/TPO/250PPC
75	500	100	100	550	150	SW30/TPO/500PPC
75	750	100	100	780	150	SW30/TPO/750PPC
75	1000	100	100	1012	150	SW30/TPO/1000PPC
100	250	100	100	330	160	SW40/TPO/250PPC
100	500	100	100	563	160	SW40/TPO/500PPC
100	750	100	100	794	160	SW40/TPO/750PPC
100	1000	100	100	1023	160	SW40/TPO/1000PPC

Standard Base Clips

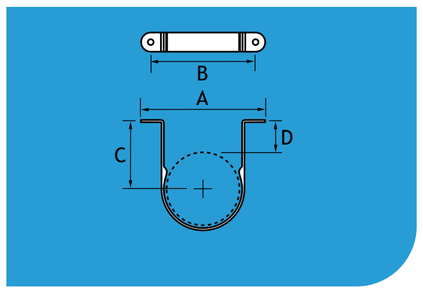

Pipe Size	A	B	C	D	Product Code
63	124	100	65	33.5	RW1/236PPC
75	137	112	71	33	RW2/237PPC
100	163	138	90	39	RW3/238PPC

Extended Base Clips

Note: Dimension C can be cut on site, min and max dimensions below

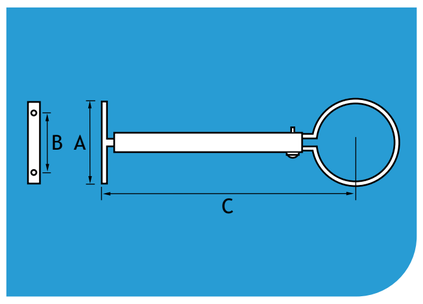

Pipe Size	A	B	C	Product Code
63	87	47	279	RW1/364PPC
75	87	47	285	RW2/365PPC
100	87	47	304	RW3/366PPC

Small Base Clips

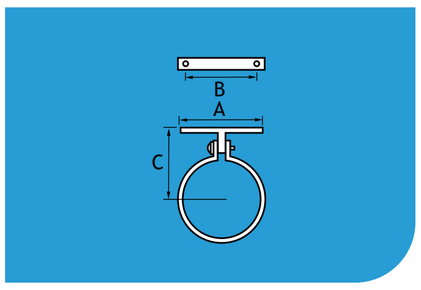

Pipe Size	A	B	C	Product Code
63	87	47	74	RW1/SB/PCPPC
75	87	47	80	RW2/SB/PCPPC
100	87	47	92	RW3/SB/PCPPC

Contemporary Rainwater Heads

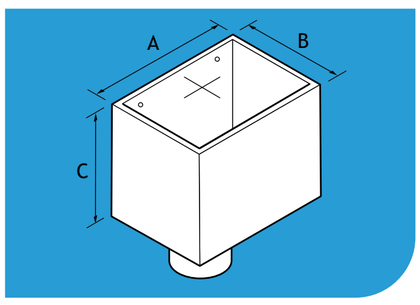

Pipe Size	A	B	C	Product Code
63	250	180	200	CP25/HOPPPC
75	250	180	200	CP30/HOPPPC
100	250	180	200	CP40/HOPPPC

Note: Traditional design hopper heads can also be used if desired. The spigot position is suited to a standard pipe clip. If a small base pipe clip is required please state this at point of ordering, so that the hopper can be fabricated to suit.
Please refer to sections of this brochure covering Heritage Pipes and Fittings.

Note: The products are available in plain mill finish or polyester powder coated using a BBA approved process. Product codes in the tables refer to the powder coated finish. For mill finish please remove the suffix PPC. Sundry items are not included as standard unless otherwise stated. Please order sundry items separately.

Guardian -Security Pipe System - Product Summary

A contemporary range of extruded aluminium downpipes designed for mounting flush with the building fabric. Guardian pipework has concealed brackets and concealed jointing which provides a high level of security.

Guardian - Circular Pipe

86 x 106mm
111 x 138mm

Guardian - Square Pipe

80 x 72mm
109 x 102mm

Guardian - Rectangular Pipe

84 x 102mm

Applications

- Specifically designed for security conscious environments
- Suitable for new build and refurbishment projects
- Compatible with Heritage, Aqualine and GX gutter systems

Features & Performance

- Choice of circular, square and rectangular pipes
- Profiles fit flush to the wall making them vandal resistant and ungrippable
- Lightweight, durable and non-corrodible
- Life expectancy of aluminium: 40 years (rural/suburban areas); up to 25 years (industrial/marine areas)
- Easy to handle and fix
- Aluminium is 100% recyclable

Manufacture

- UK manufactured
- Made from extruded aluminium to BS EN 12020:2001, BS EN 515:1993, BS EN 573:1995 and BS EN 755, from grade 6063 T6 alloy

Installation & Fixing

- Method of fixing allows pipes to be fitted into a recess in the facade
- Systems are assembled from the ground upwards connecting to running outlets
- Special drain connectors are available for connection to gullies
- Minimal maintenance requirements

Guardian - Circular Pipes & Fittings

Contents

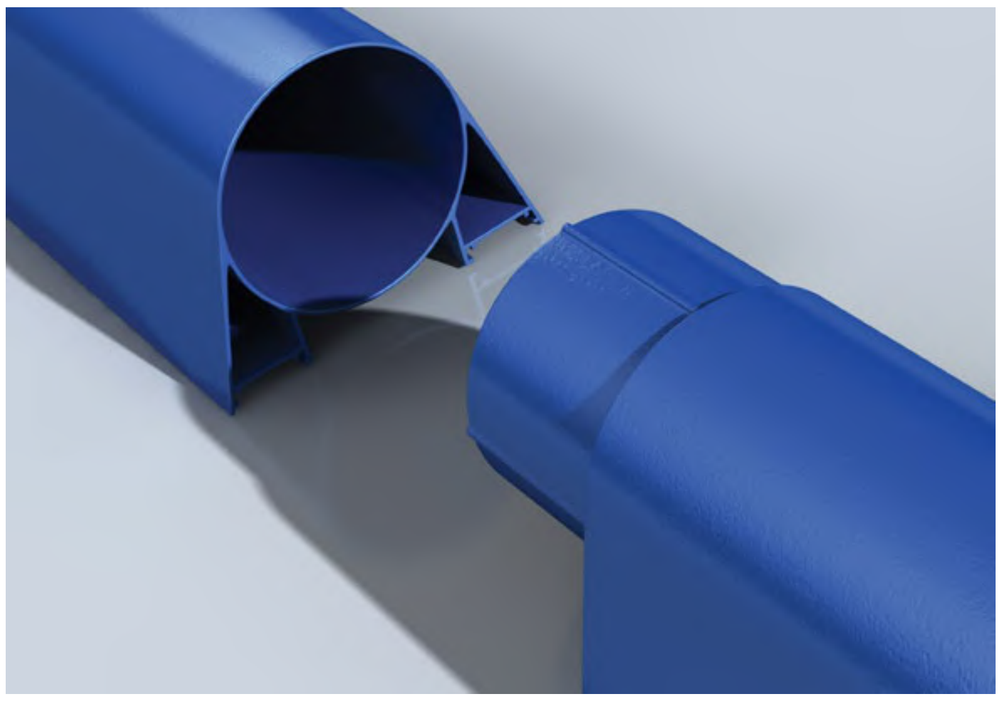

Guardian Circular Pipes are available in 2 sizes and pipe lengths of 2m. Concealed flush fixing ensures that the pipe cannot be scaled. Polyester powder coated using the raincote range on a BBA approved process.

Notes: Guardian is a bespoke manufactured range. Contact Alumasc Technical Services for more information.

All dimensions are in mm unless shown otherwise.

Pipes

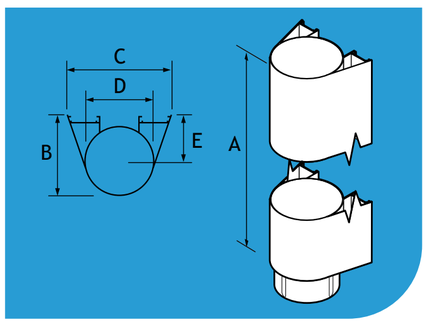

Pipe Size	Pipe Length (A)	B	C	D	E	Product Code
86 x 106	3000	63	86	70	47	HSP/V30/2MAPPC
86 x 106	2000	63	86	70	47	HSP/V30/1MAPPC
111 x 138	1000	63	111	102	60	HSP/V40/2MAPPC
111 x 138	3000	75	111	102	60	HSP/V40/1MAPPC

Access Pipes

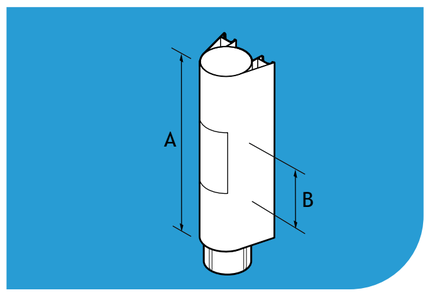

Pipe Size	A	B	Product Code
86 x 106	300	150	HSP/V30/ACPPPC
111 x 138	300	150	HSP/V40/ACPPPC

Shoe

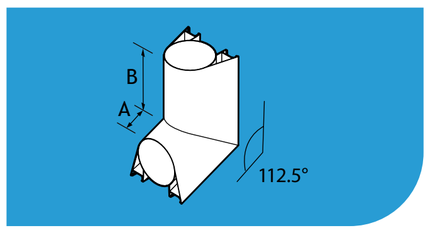

Pipe Size	A	B	Product Code
86 x 106	30	100	HSP/V30/SHPPC
111 x 138	30	100	HSP/V40/SHPPC

Drain Connector

Note: This is a made to order item. Dimensions are required from the wall to the centre of the drain prior to placing an order

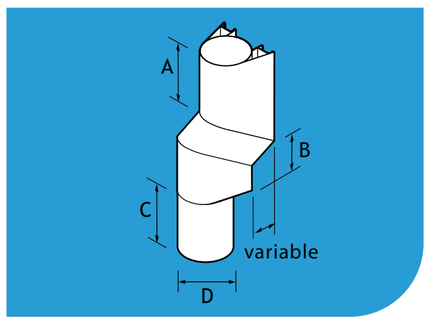

Pipe Size	A	B	C	D	Product Code
86 x 106	100	100	100	Variable	HSP/V30/ZADPPPC
111 x 138	100	100	100	Variable	HSP/V40/ZADPPPC

Bend

Note: Please specify whether left, right, front or rear is required. Please specify whether 92.5, 112.5 or 135° is required

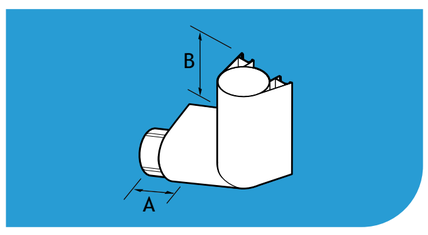

Pipe Size	A	B	Product Code
86 x 106	100	100	HSP/V30/ZBNDPPC
111 x 138	100	100	HSP/V40/ZBNDPPC

Branch

Note: Please state whether left or right hand is required. Please specify whether 92.5, 112.5 or 135° is required

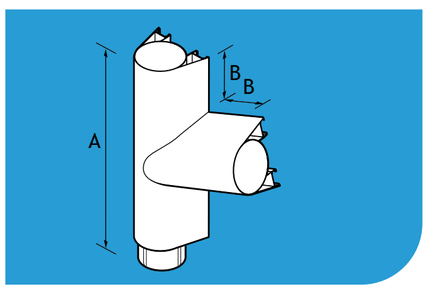

Pipe Size	A	B	Product Code
86 x 106	300	100	HSP/V30/ZBRNPPC
111 x 138	300	100	HSP/V40/ZBRNPPC

Note: The products are available in plain mill finish or polyester powder coated using a BBA approved process. Product codes in the tables refer to the powder coated finish. For mill finish please remove the suffix PPC. Sundry items are not included as standard unless otherwise stated. Please order sundry items separately.

Contents

92.5º Two Part Offsets

Pipe Size	A	B	MAX	MIN	Product Code
86x106	100	305	413	152	HSP/V30/305/92
86x106	100	533	641	152	HSP/V30/533/92
86x106	100	762	870	152	HSP/V30/762/92
111x138	100	305	438	181	HSP/V40/305/92
111x138	100	533	666	181	HSP/V40/533/92
111x138	100	762	895	181	HSP/V40/762/92

112.5º Two Part Offsets

Note: Dimension C can be cut on site, min and max dimensions below

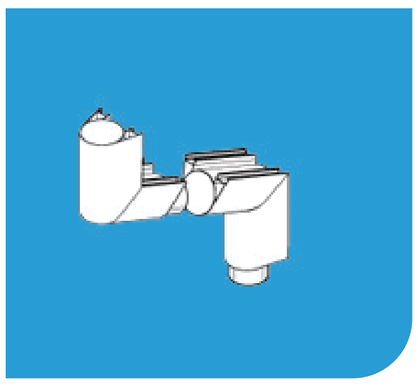

Pipe Size	A	B	MAX	MIN	Product Code
86x106	100	305	413	152	HSP/V30/305/112
86x106	100	533	641	152	HSP/V30/533/112
86x106	100	762	870	152	HSP/V30/762/112
111x138	100	305	438	181	HSP/V40/305/112
111x138	100	533	666	181	HSP/V40/533/112
111x138	100	762	895	181	HSP/V40/762/112

135º Two Part Offsets

Note: Dimension C can be cut on site, min and max dimensions below

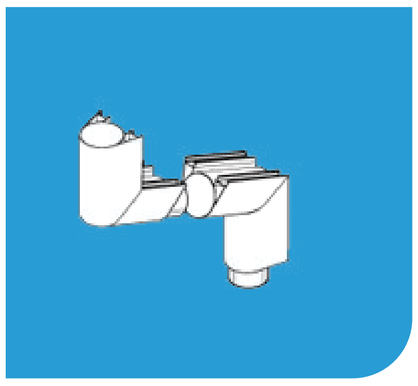

Pipe Size	A	B	MAX	MIN	Product Code
86x106	100	305	413	152	HSP/V30/305/135
86x106	100	533	641	152	HSP/V30/533/135
86x106	100	762	870	152	HSP/V30/762/135
111x138	100	305	438	181	HSP/V40/305/135
111x138	100	533	666	181	HSP/V40/533/135
111x138	100	762	895	181	HSP/V40/762/135

135º Fixed Offsets

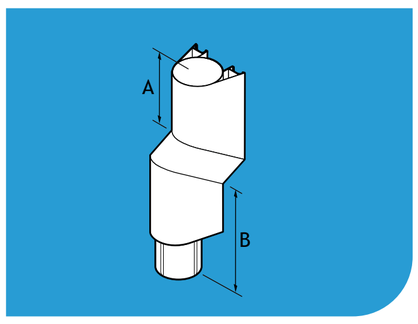

Pipe Size	Offset	A	B	Product Code
86 x 106	75	100	100	HSP/V30/75/135APPC
111 x 138	75	100	100	HSP/V40/75/135APPC

Make-Up Piece

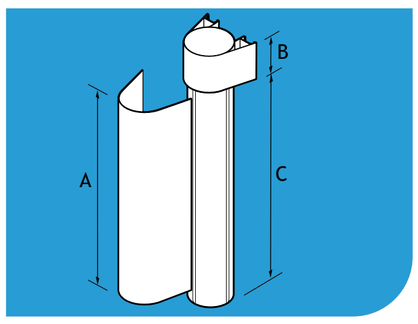

Pipe Size	A	B	C	Product Code
86 x 106	340	60	380	HSP/V30/MUPPPC
111 x 138	340	60	380	HSP/V40/MUPPPC

Contemporary Rainwater Heads

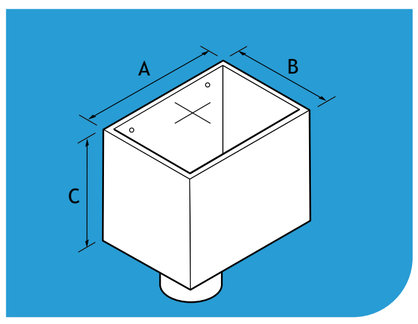

Pipe Size	A	B	C	Product Code
86 x 106	250	180	200	HSP/V30/HOPPPC
111 x 138	250	180	200	HSP/V40/HOPPPC

Note: The products are available in plain mill finish or polyester powder coated using a BBA approved process. Product codes in the tables refer to the powder coated finish. For mill finish please remove the suffix PPC. Sundry items are not included as standard unless otherwise stated. Please order sundry items separately.

Guardian - Square & Rectangular Pipes & Fittings

Contents

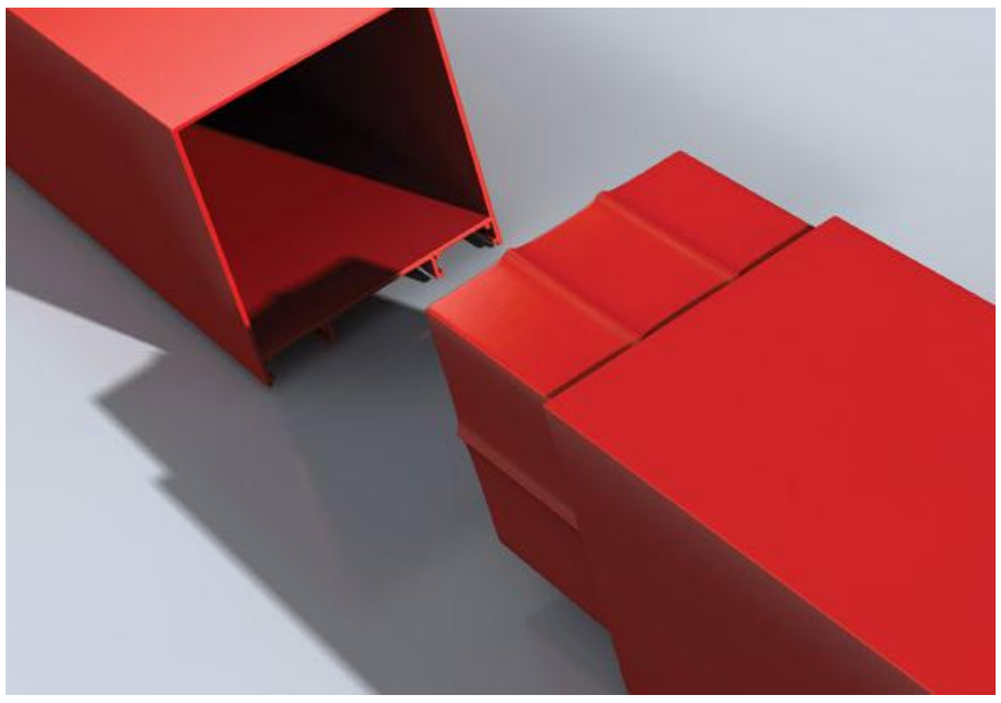

Guardian Square Pipes are available in 3 square/rectangular sizes and pipe lengths of 2m. Concealed flush fixing ensures that the pipe cannot be scaled. Polyester powder coated using the raincote range on a BBA approved process.

Notes: Guardian is a bespoke manufactured range. Contact Alumasc Technical Services for more information.

All dimensions are in mm unless shown otherwise.

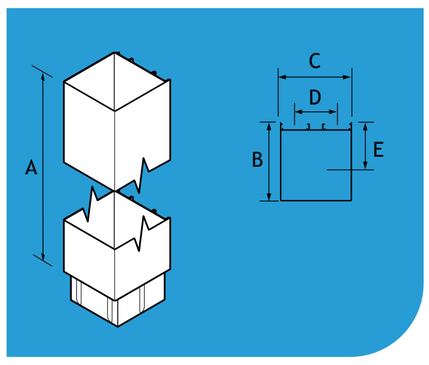

Pipe Size	Pipe Length (A)	B	C	D	E	Product Code
80 x 72	2000	80	72	41	44	HSP/S33/2MAPPC
80 x 72	1000	80	72	41	44	HSP/S33/1MAPPC
84 x 102	2000	84	102	71	46	HSP/S43/2MAPPC
84 x 102	1000	84	102	71	46	HSP/S43/1MAPPC
109 x 102	2000	109	102	71	59	HSP/S44/2MAPPC
109 x 102	1000	109	102	71	59	HSP/S44/1MAPPC

Access Pipes

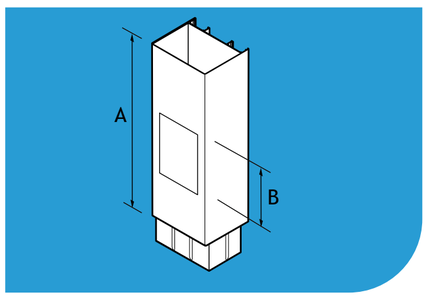

Pipe Size	A	B	Product Code
80 x 72	300	150	HSP/S33/ACPPPC
84 x 102	300	150	HSP/S43/ACPPPC
109 x 102	300	150	HSP/S44/ACPPPC

Shoe

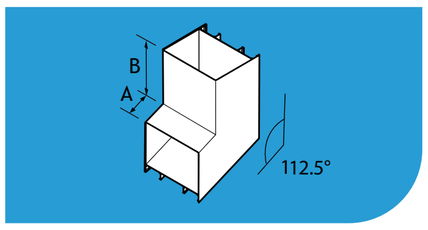

Pipe Size	A	B	Product Code
80 x 72	30	100	HSP/S33/SHPPC
84 x 102	30	305	HSP/S43/SHPPC
109 x 102	30	100	HSP/S44/SHPPC

Drain Connector

Note: This is a made to order item. Dimensions are required from the wall to the centre of the drain prior to placing an order

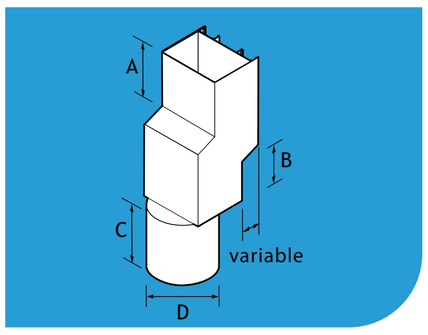

Pipe Size	A	B	C	D	Product Code
80 x 72	100	100	100	Variable	HSP/S33/ZADPPPC
84 x 102	100	100	100	Variable	HSP/S43/ZADPPPC
109 x 102	100	100	100	Variable	HSP/S44/ZADPPPC

Bend

Note: Please specify whether left, right, front or rear is required. Please specify whether 92.5, 112.5 or 135° is required

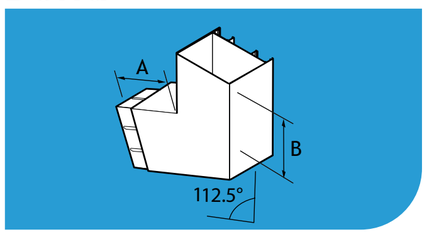

Pipe Size	A	B	Product Code
80 x 72	100	100	HSP/S33/ZBNDPPC
84 x 102	100	100	HSP/S43/ZBNDPPC
109 x 102	100	100	HSP/S44/ZBNDPPC

Branch

Note: Please state whether left or right hand is required. Please specify whether 92.5, 112.5 or 135° is required

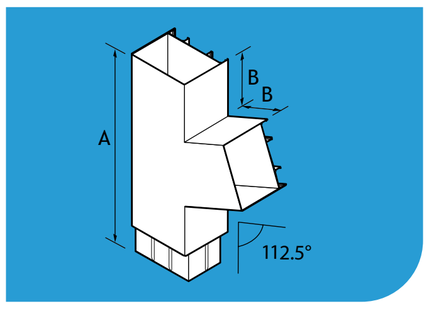

Pipe Size	A	B	Product Code
80 x 72	300	100	HSP/S33/ZBRNPPC
84 x 102	300	100	HSP/S43/ZBRNPPC
109 x 102	300	100	HSP/S44/ZBRNPPC

Note: The products are available in plain mill finish or polyester powder coated using a BBA approved process. Product codes in the tables refer to the powder coated finish. For mill finish please remove the suffix PPC. Sundry items are not included as standard unless otherwise stated. Please order sundry items separately.

Contents

92.5º Two Part Offsets

Note: Dimension C can be cut on site, min and max dimensions below

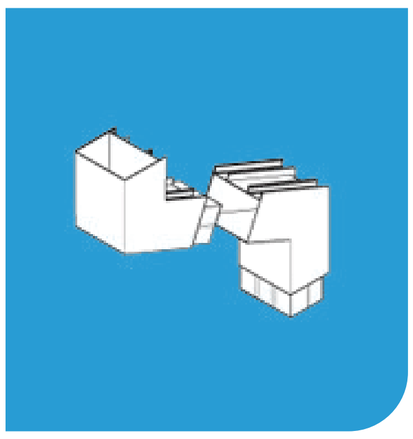

Pipe Size	Offset size	A	MAX	MIN	Product Code
80x72	305	100	408	147	HSP/S33/305/92
80x72	533	100	636	147	HSP/S33/533/92
80x72	762	100	865	147	HSP/S33/762/92
84x102	305	100	413	152	HSP/S43/305/92
84x102	533	100	641	152	HSP/S43/533/92
84x102	762	100	870	152	HSP/S43/762/92
109x102	305	100	436	178	HSP/S44/305/92
109x102	533	100	664	178	HSP/S44/533/92
109x102	762	100	893	178	HSP/S44/762/92

112.5º Two Part Offsets

Note: Dimension C can be cut on site, min and max dimensions below

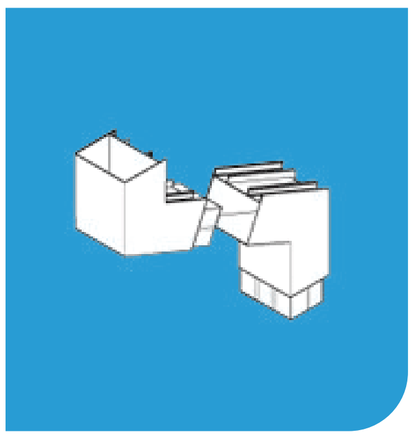

Pipe Size	A	Offset Size	MAX	MIN	Product Code
80x72	100	305	354	115	HSP/S33/305/112
80x72	100	533	568	115	HSP/S33/533/112
80x72	100	762	780	115	HSP/S33/762/112
84x102	100	305	354	115	HSP/S43/305/112
84x102	100	533	568	115	HSP/S43/533/112
84x102	100	762	780	115	HSP/S43/762/112
109x102	100	305	436	178	HSP/S44/305/112
109x102	100	533	664	178	HSP/S44/533/112
109x102	100	762	893	178	HSP/S44/762/112

135º Two Part Offsets

Note: Dimension C can be cut on site, min and max dimensions below

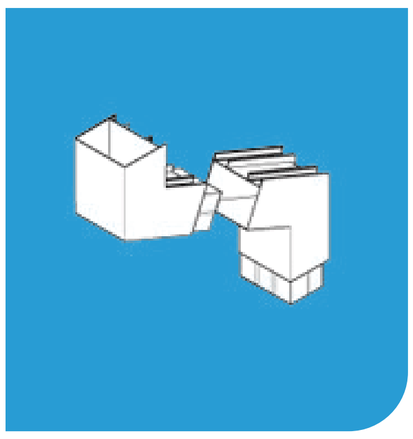

Pipe Size	A	Offset Size	MAX	MIN	Product Code
80x72	100	305	257	100	HSP/S33/305/135
80x72	100	533	418	100	HSP/S33/533/135
80x72	100	762	580	100	HSP/S33/762/135
84x102	100	305	258	100	HSP/S43/305/135
84x102	100	533	419	100	HSP/S43/533/135
84x102	100	762	581	100	HSP/S43/762/135
109x102	100	305	266	100	HSP/S44/305/135
109x102	100	533	427	100	HSP/S44/533/135
109x102	100	762	590	100	HSP/S44/762/135

135º Fixed Offsets

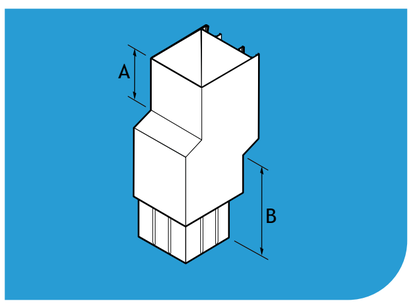

Pipe Size	Offset	A	B	Product Code
80 x 72	75	100	100	HSP/S33/75/135APPC
84 x 102	75	100	100	HSP/S43/75/135APPC
109 x 102	75	100	100	HSP/S44/75/135APPC

Make-Up Piece

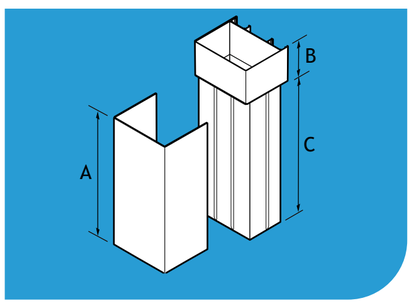

Pipe Size	A	B	C	Product Code
80 x 72	340	60	380	HSP/S33/MUPPPC
84 x 102	340	60	380	HSP/S43/MUPPPC
109 x 102	340	60	380	HSP/S44/MUPPPC

Contemporary Rainwater Heads

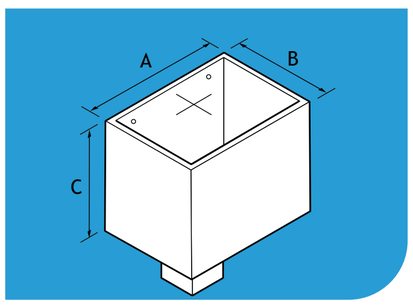

Pipe Size	A	B	C	Product Code
80 x 72	250	180	200	HSP/S33/HOPPPC
84 x 102	250	180	200	HSP/S43/HOPPPC
109 x 102	250	180	200	HSP/S44/HOPPPC

Note: The products are available in plain mill finish or polyester powder coated using a BBA approved process. Product codes in the tables refer to the powder coated finish. For mill finish please remove the suffix PPC. Sundry items are not included as standard unless otherwise stated. Please order sundry items separately.

Contents

Touch Up Paint

RAL 1011m Brown Beige
RAL 1013m Pearl White
RAL 1021m Cadmium Yellow
RAL 2002m Vermilion
RAL 3003m Ruby Red
RAL 3005m Wine Red
RAL 5003m Sapphire Blue
RAL 5010m Flower Blue
RAL 6005m Moss Green
RAL 6018m Yellow Green
RAL 7005m Mouse Grey
RAL 7006m Beige Grey
RAL 7012m * Basalt Grey
RAL 7015m * Slate Grey
RAL 7016m * Anthracite Grey
RAL 7024m Graphite Grey
RAL 7036m Platinum Grey
RAL 7037m * Dusty Grey
RAL 7038m Agate Grey
RAL 8017m Chocolate Brown
RAL 8019m Grey Brown
RAL 9006g Metallic Silver (80% Gloss)
RAL 9006m Metallic Silver
RAL 9016m * White
RAL 9017m Black (60% Gloss)
Textured Black

Lightning Link

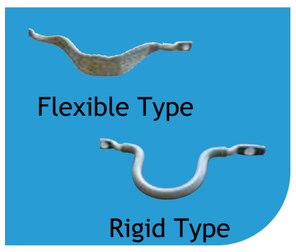

Type	Product Code
Flexible Flat Braid Assembly	LL635007
Rigid Type Assembly	LL632914
Oxide Inhibitor Compound	LL991972

Note: Provides an earth continuity bond intended for connection across joints on-site thereby providing electrical continuity throughout the entire metal gutter system. Extra pre-drilled fixing holes in gutter and fittings can be provided

Gutter Dry Joint System

Type	Product Code
TPE Sealing strips	MET001

Note: Only suitable for Half Round Heritage

Solvent Cleaner

Type	Product Code
Fast Drying Solvent Cleaner	SC991281

Backing Foam

Type	Product Code
10m Roll x 6mm dia Backing Foam	BF991408

Silicone Sealant

Type	Colour	Size	Product Code
Dow Corning	White	310ml	SS991558
Dow Corning	Grey	310ml	SS991559
Dow Corning	Bronze	310ml	SS991560
Dow Corning	Black	310ml	SS991561
Dow Corning	Limestone	310ml	SS991562
Translucent Silicone	Translucent	310ml	SS991563

Gutter Bolts (Nut, Bolt & Washer)

Type	Size	Notes	Product Code
Aluminium Nut/Bolt/Washer	M6 x 12mm	For use with the GX Gutter Range	NBW630308
Aluminium Nut/Bolt/Washer	M6 x 20mm	For use with the Heritage Gutter Range	NBW630307

Woodscrew

Note: Manufactured from bright zinc plated yellow passivated mild steel

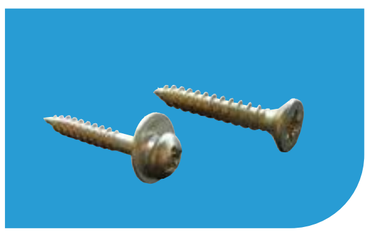

Type	Size	Notes	Product Code
Countersunk	No.12 x 1.5”	To fix rafter arms to GX Brackets	ZNBW969041
Roundhead	No.12 x 1.5”	To fix Heritage Fascia Brackets /‘direct fix’ Gutter range	NBW630362
Roundhead	No.12 x 2”	To fix pipe sockets with ears or pipe clips	NBW630361

Note: The products are available in plain mill finish or polyester powder coated using a BBA approved process. Product codes in the tables refer to the powder coated finish. For mill finish please remove the suffix PPC. Sundry items are not included as standard unless otherwise stated. Please order sundry items separately.

Alumasc Rainwater Systems

The Cast Iron Standard Range

This rainwater standard range features the Apex Heritage System, available with four gutter and three downpipe profiles, complete with fittings and accessories ranging from extended bracketry to hopper heads.

Apex Cast Iron Rainwater - Product Selector

Alumasc Rainwater Systems in cast iron, combine modern engineering and high performance materials to offer unrivalled choices and solutions for designers associated with fast track newbuild or refurbishment projects.

Cast Iron: Standard

Apex Heritage System

A comprehensive, traditional range of four gutter and three downpipe profiles, all in a variety of sizes, together with associated fittings and accessories. The gutters include a choice of half round, beaded half round, victorian ogee and moulded. The downpipes are circular, square or rectangular.

Fittings and accessories include all the necessary items expected of a truly comprehensive rainwater system, ranging from stopends to extended bracketry, and shoes to hopperheads.

The system is available in a range of 8 standard colour options in a high quality two-pack epoxy primer and top coat finish. By removing the need for on-site pre-installation painting its offers up to 60% saving on time and 30% on cost. It is also available in a factory primed finish.

Cast Iron: Made to Order

Apex Heritage System

No standard product range can hope to satisfy all the stylistic options for new building, nor address the challenges of exact replacement for refurbishment and restoration. Apex Heritage Cast Iron Made to Order is specifically designed to meet these needs.

A standard range of decorative rainwater heads, for example, are available because Alumasc holds the patterns and can produce the items to order. The number of available made-to-order designs increases as additional patterns are created for new commissions.

A variety of different designs is possible for decorative earbelts, and additional enrichments can be incorporated into the rainwater heads where required.

Apex Cast Iron - Overview of finishes

Alumasc Cast Iron Rainwater systems are available in a range of 8 standard colour options to suit tradition heritage projects. Alumasc's in-house paint plant produces a Certified Factory painted high quality two-pack epoxy primer and a top coat finish.

Pre-finished painted black

Apex Heritage Cast Iron Rainwater - Painted

The renowned quality of Apex Heritage Cast Iron is available pre-painted on all four gutter profiles (Half Round, Victorian Ogee, Beaded Half Round and Moulded) plus the full range of circular or square/rectangular downpipes with authentic socketed joints.

Now available in 8 standard colours to suit traditional heritage projects, other RAL colours are available on request.

8 Standard colours to compliment your project

- RAL 3009m Oxide Red
- RAL 3020m Traffic Red
- RAL 5010m Flower Blue
- RAL 6005m Moss Green
- RAL 7016m Anthracite Grey
- RAL 8015m Chestnut Brown
- RAL 9005m Black
- RAL 9016m White

The high performance two-pack epoxy primer and a top coat finish is factory-applied under controlled conditions and has been successfully developed to give a smooth and long lasting finish to the cast iron. The new certified factory painted finish marque guarantees the product has received the fully painted finish. This is certified with approved stickers on the product giving both the client and specifier piece of mind.

By removing the need for on-site pre-installation painting Alumasc's painted cast iron offers the following benefits:

- 60% saving on time, as there is no need to paint several coats on site
- Quicker installation and less disruption on site
- 30% saving on cost as there is no need for extra labour to paint on site
- The painted finish only costs 20% more than the primed finished product
- Durable, even and long lasting finish
- Independent test results conducted on the finish prove excellent resistance to salt, heat and frost

Factory-applied oxide primer

Apex Heritage Cast Iron Rainwater - Primed

A factory primed finish is also available with a one coat oxide primer. This primer will give protection against corrosion during transportation and short-term undercover storage and will provide a suitable surface for additional painting. On site handling and painting are the responsibility of the contractor.

Alumasc recommends that on site further priming coat be applied followed by 1 undercoat and 2 gloss coats of an alkyd paint system. All individual elements should receive the first gloss coats before fixing, and finished with the final gloss coat after the installation is complete. It is advisable to take the paint finish inside collars and within the ends of rainwater pipes to avoid the possibility of rust staining.

Apex Heritage Rainwater Systems - Standard Product Range

Contents

Apex Heritage is a comprehensive range of traditional gutter profiles, round, square and rectangular pipes and all associated fittings and accessories. Designed to provide all the essential architectural features appropriate to traditionally designed buildings, the Apex Heritage range is also fully in tune with modern fast track building contracts.

Apex Heritage - Half Round Gutter

100mm (4”) 150mm (6’’)
113mm (4.5”)
125mm (5”)

Apex Heritage - Beaded Half Round Gutter

113mm (4.5)
125mm (5”)

Apex Heritage - Victorian Ogee Gutter

113mm (4.5”)
125mm (5”)

Apex Heritage - Moulded Gutter

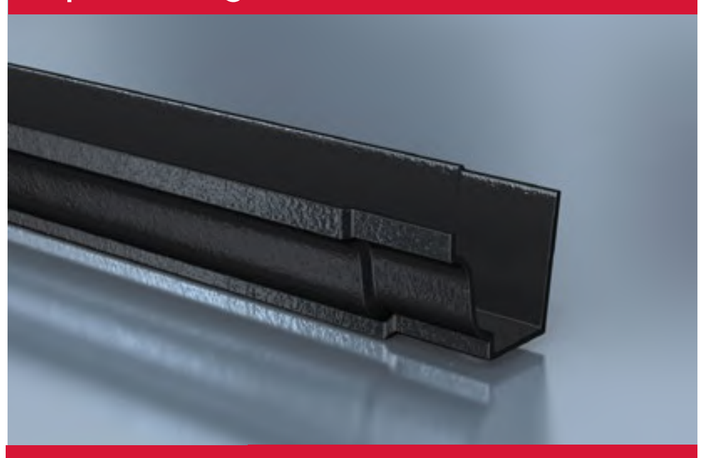

100 x 75mm (4 x 3”) 150 x 100mm (6 x 4”)
125 x 100mm (5 x 4”)

Apex Heritage - Circular Pipe

63mm (2.5”) Length
75mm (3”) 1.83m (6’)
100mm (4”) 0.9mm (3’)

Apex Heritage - Square Pipe

75 x 75mm (3 x 3”) Length
100 x 100mm (4 x 4”) 1.83m (6’)
0.9mm (3’)

Apex Heritage - Rectangular Pipe

100 x 75mm (4 x 3”) (6 x 4”)
Length
125 x 100mm (5 x 4”) 1.83m (6’)
0.9mm (3’)
150 x 100 mm

Applications

- Suited to traditional craft based contracts
- Closely replicates historic styles
- For both flush and projecting eaves applications

Features & Performance

- 4 gutter profiles and 3 downpipe profiles available in a choice of sizes
- Downpipes available in 0.9m (3ft) and 1.83m (6ft) lengths
- Extremely strong, durable and vandal resistant
- Dimensionally accurate and stable
- Life expectancy in excess of 40 years
- Cast iron is 100% recyclable
-

Manufacture

- Authentic sand castings combining traditional manufacture with modern quality control standards
- A comprehensive standard range complemented with master patterns for a wide range of gutter profiles, downpipes and accessories, which can be manufactured to order.
- Complies with BS 460:2002 Cast Iron Rainwater Goods

Installation & Fixing

- Gutters are wet sealed with bolted joints, with a range of fixing options
- For Half Round gutters the Hydrostrip EDPM rubber seal is recommend for faster and cleaner solution to gutter jointing
- Gutters should be supported at 900mm centres either on brackets or for ogee, moulded and box types, by direct screw fixing through the back of the gutter
- Downpipes should be fixed back to the wall at 1.83 (6ft) centres through eared sockets or via separate earbelt and holderbats
- Minimal maintenance requirements

Apex Heritage - Half Round Gutters & Fittings

Contents

Apex Heritage Half Round socketed cast iron gutters are available in 4 sizes. A traditional profile with the unmistakable character and appearance of sand cast iron. There is a range of fittings and fixings as illustrated.

Notes:
All dimensions shown are in mm unless shown otherwise.
Gutter sizes shown are nominal.
T = Thickness (nominal +/- 1mm)
Product codes in the tables refer to primed products.
For painted products add the suffix /PA to the product code reference.

Gutters

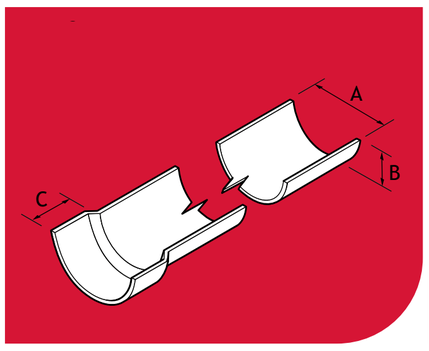

Gutter Size	Gutter Length	A	B	C	T	Weight (KG)	Product Code
100 (4”)	1830	102	51	44	4	8.0	HG40/6FT
113 (4.5”)	1830	114	57	44	4	10.5	HG45/6FT
125 (5”)	1830	127	63	44	4	11.5	HG50/6FT
150 (6”)	1830	150	75	44	4	13.5	HG60/6FT

Union Clips

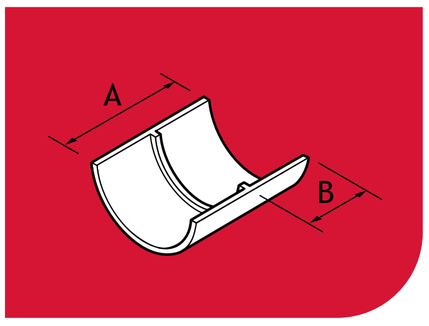

Gutter Size	A	B	Product Code
100 (4”)	98	44	HG40/UC
113 (4.5”)	98	44	HG45/UC
125 (5”)	98	44	HG50/UC
150 (6”)	95	44	HG60/UC

Stop Ends

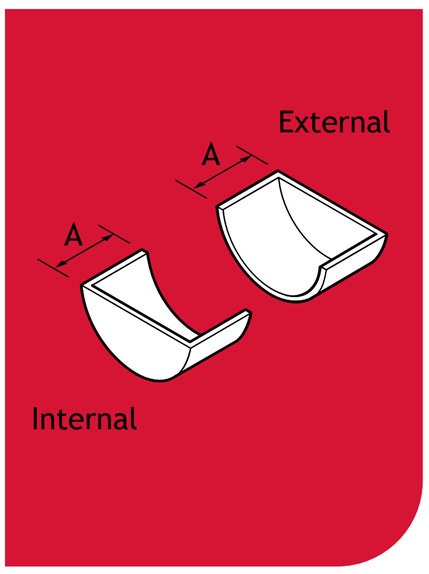

Gutter Size	Type	A	Product Code
100 (4”)	External	51	HG40/SE/E
113 (4.5”)	External	51	HG45/SE/E
125 (5”)	External	51	HG50/SE/E
150 (6”)	External	51	HG60/SE/E
100 (4”)	Internal	45	HG40/SE/I
113 (4.5”)	Internal	45	HG45/SE/I
125 (5”)	Internal	45	HG50/SE/I
150 (6”)	Internal	45	HG60/SE/I

Fascia Brackets

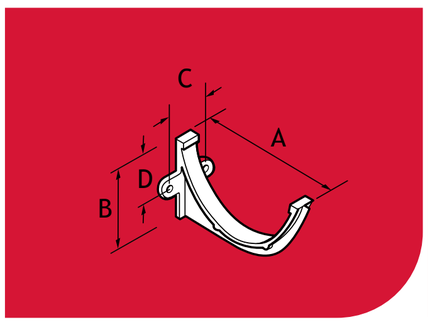

Gutter Size	A	B	C	D	Product Code
100 (4”)	127	65	38	35	HG40/FB/CI
113 (4.5”)	140	70	38	40	HG45/FB/CI
125 (5”)	155	85	38	45	HG50/FB/CI
150 (6”)	190	120	38	90	HG60/FB/CI

Contents

Drop End Outlet - with Socket

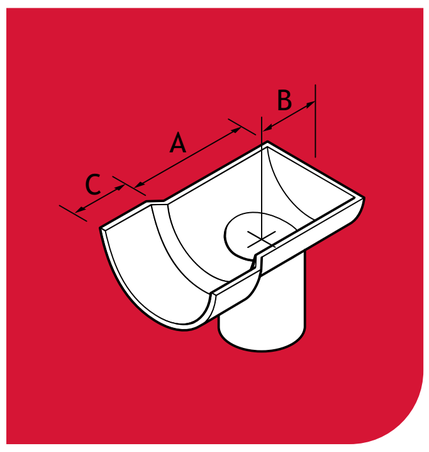

Gutter Size	Pipe Size	A	B	C	Product Code
100 (4”)	63	125	64	44	HG40/DE/25/E
113 (4.5”)	63	125	64	44	HG45/DE/25/E
125 (5”)	63	125	64	44	HG50/DE/25/E
100 (4”)	76	125	64	44	HG40/DE/30/E
113 (4.5”)	76	125	64	44	HG45/DE/30/E
125 (5”)	76	125	64	44	HG50/DE/30/E

Drop End Outlet - with Spigot

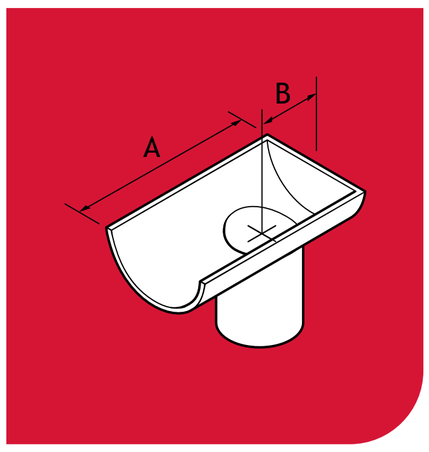

Gutter Size	Pipe Size	A	B	Product Code
100 (4”)	63	125	64	HG40/DE/25/I
113 (4.5”)	63	125	64	HG45/DE/25/I
125 (5”)	63	125	64	HG50/DE/25/I
100 (4”)	76	125	64	HG40/DE/30/I
113 (4.5”)	76	125	64	HG45/DE/30/I
125 (5”)	76	125	64	HG50/DE/30/I

Running Outlet - with Double Spigot Socket

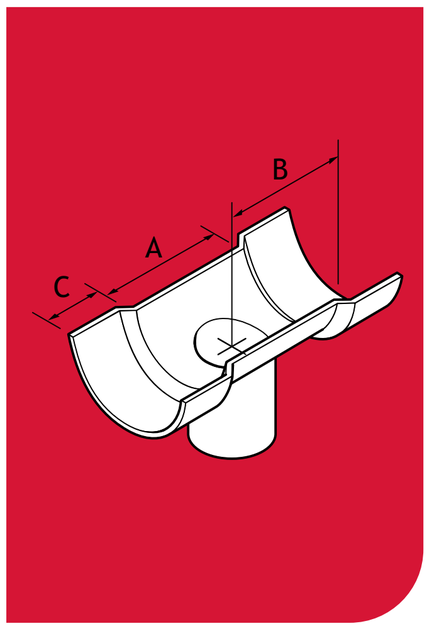

Gutter Size	Pipe Size	A	B	C	Product Code
100 (4”)	63	156	121	44	HG40/RO/25
113 (4.5”)	63	156	121	44	HG45/RO/25
125 (5”)	63	156	121	44	HG50/RO/25
100 (4”)	75	156	121	44	HG40/RO/30
113 (4.5”)	75	156	121	44	HG45/RO/30
125 (5”)	75	156	121	44	HG50/RO/30
150 (6”)	75	156	121	44	HG60/RO/30
125 (5”)	100	156	121	44	HG50/RO/40
150 (6”)	100	156	121	44	HG60/RO/40

90º Angles Combined

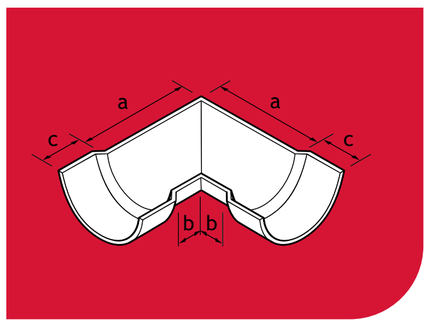

Gutter Size	Type	A	B	C	Product Code
100 (4”)	Internal / External	190	79	44	HG40/A/90
113 (4.5”)	Internal / External	200	79	44	HG45/A/90
125 (5”)	Internal / External	209	79	44	HG50/A/90
150 (6”)	Internal / External	235	79	44	HG60/A/90

120º Angles Combined

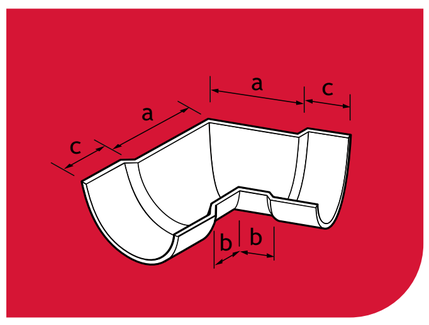

Gutter Size	Type	A	B	C	Product Code
100 (4”)	Internal / External	124	79	44	HG40/A/120
113 (4.5”)	Internal / External	124	76	44	HG45/A/120
125 (5”)	Internal / External	136	79	44	HG50/A/120
150 (6”)	Internal / External	140	75	44	HG60/A/120

Apex Heritage - Half Round Gutters & Fittings

Contents

Apex Heritage Beaded Half Round socketed cast iron gutters, in 2 sizes, incorporate a pronounced feature bead on both lips. This adds character and definition to the gutter edge in a true sand cast product. Fittings and fixings are also available as illustrated.

Notes:
All dimensions shown are in mm unless shown otherwise.
Gutter sizes shown are nominal.
T = Thickness (nominal +/- 1mm)
Product codes in the tables refer to primed products.
For painted products add the suffix /PA to the product code reference.

135º Angles Combined

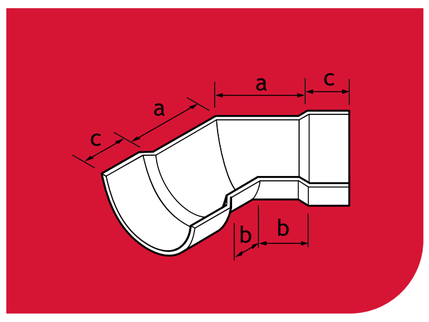

Gutter Size	Type	A	B	C	Product Code
100 (4”)	Internal / External	124	79	44	HG40/A/135
113 (4.5”)	Internal / External	124	76	44	HG45/A/135
125 (5”)	Internal / External	137	79	44	HG50/A/135
150 (6”)	Internal / External	140	73	44	HG60/A/135

Apex Heritage - Beaded Half Round Gutters & Fittings

Gutters

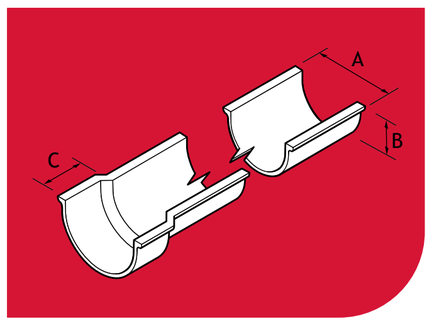

Gutter Size	Gutter Length	A	B	C	T	Weight (KG)	Product Code
113 (4.5”)	1830	114	57	44	4	11	BG45/6FT
125 (5”)	1830	127	63	44	4	12.5	BG50/6FT

Union Clips

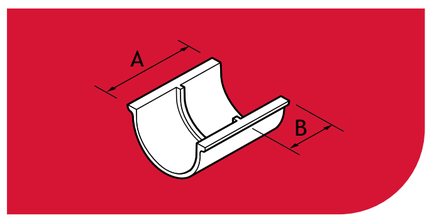

Gutter Size	A	B	Product Code
113 (4.5”)	78	44	BG45/UC
125 (5”)	78	44	BG50/UC

Stop Ends

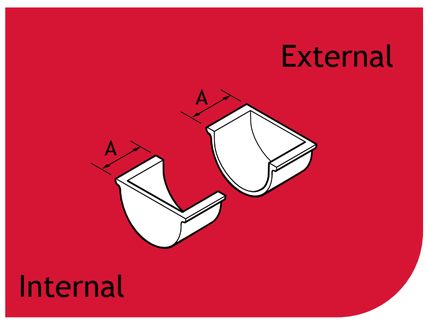

Gutter Size	Type	A	Product Code
113 (4.5”)	External	51	BG45/SE/E
125 (5”)	External	51	BG50/SE/E
113 (4.5”)	Internal	45	BG45/SE/I
125 (5”)	Internal	45	BG50/SE/I

Fascia Brackets

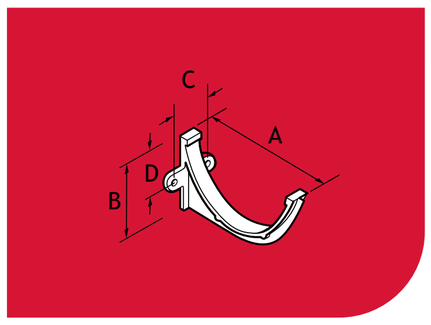

Gutter Size	A	B	C	D	Product Code
113 (4.5”)	155	97	25	75	BG45/FB/CI
125 (5”)	160	115	32	87	BG50/FB/CI

Apex Heritage - Beaded Half Round Gutters & Fittings - Cont.

Contents

Running Outlet - with Double Spigot Socket

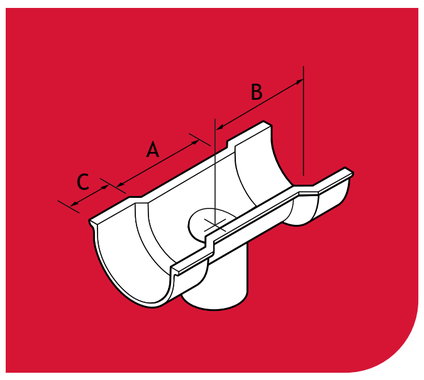

Gutter Size	A	B	C	D	Product Code
113 (4.5”)	63	156	121	44	BG45/RO/25
125 (5”)	63	156	121	44	BG50/RO/25
113 (4.5”)	75	156	121	44	BG45/RO/30
125 (5”)	75	156	121	44	BG50/RO/30
125 (5”)	100	156	121	44	BG50/RO/40

90º Angles Combined

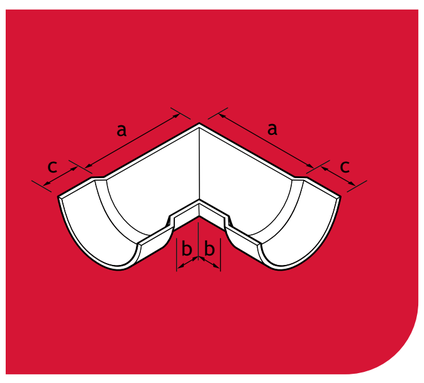

Gutter Size	Type	A	B	C	Product Code
113 (4.5”)	Internal / External	206	70	44	BG45/A/90
125 (5”)	Internal / External	116	70	44	BG50/A/90

120º Angles Combined

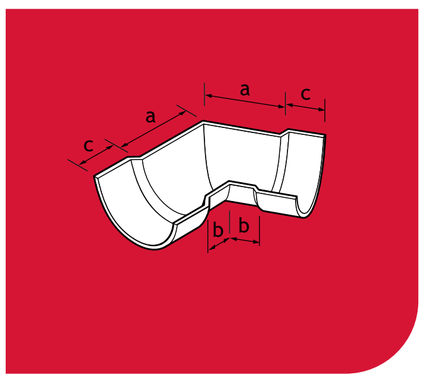

Gutter Size	Type	A	B	C	Product Code
113 (4.5”)	Internal / External	130	76	44	BG45/A/120
125 (5”)	Internal / External	140	79	44	BG50/A/120

135º Angles Combined

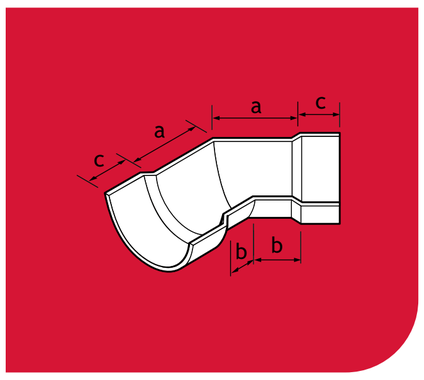

Gutter Size	Type	A	B	C	Product Code
113 (4.5”)	Internal / External	130	76	44	BG45/A/135
125 (5”)	Internal / External	140	79	44	BG50/A/135

Apex Heritage - Victorian Ogee Gutters & Fittings

Contents

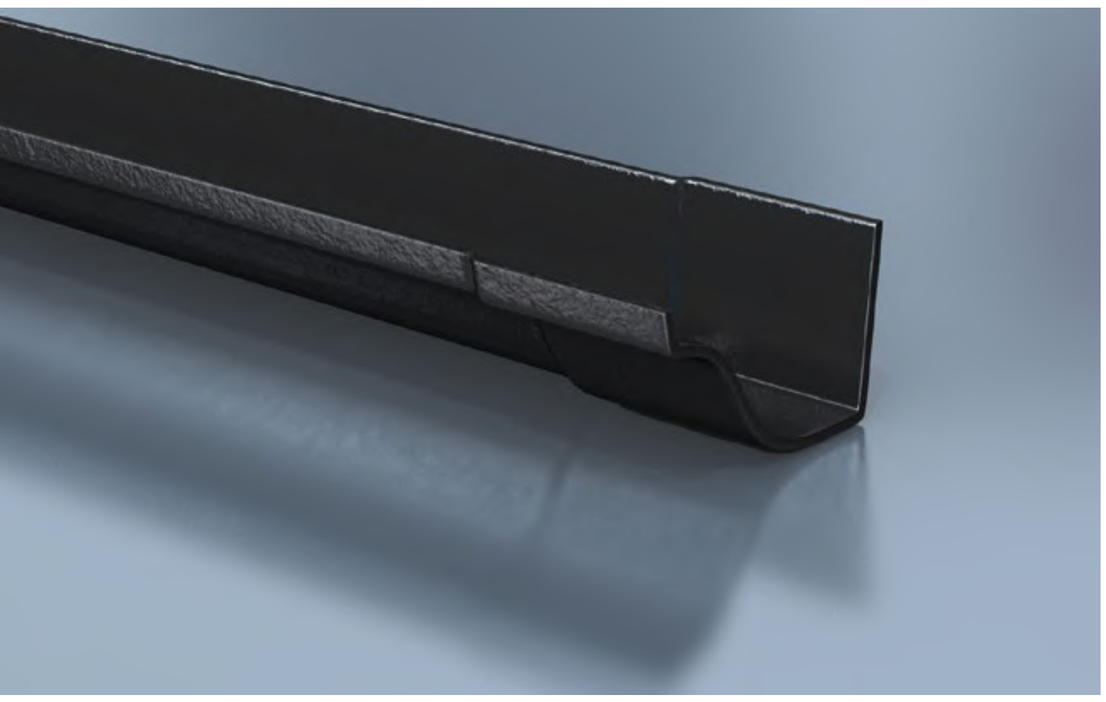

Apex Heritage Ogee cast iron socketed gutters are available in 2 sizes. An elegant Victorian ogee profile combined with the robust visual quality of sand cast iron. There is a range of fittings and fixings as illustrated.

Notes:
All dimensions shown are in mm unless shown otherwise.
Gutter sizes shown are nominal.
Victorian Ogee is a left hand socket system
T = Thickness (nominal +/- 1mm)
Product codes in the tables refer to primed products.
For painted products add the suffix /PA to the product code reference.

Gutters

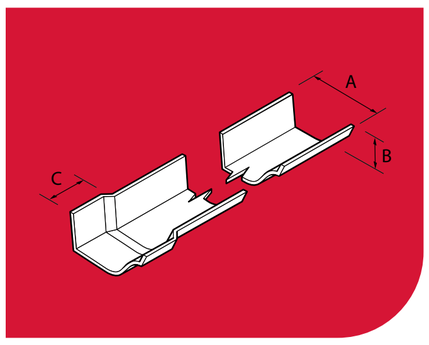

Gutter Size	Gutter Length	A	B	C	T	Weight (KG)	Product Code
113 (4.5”)	1830	114	54	44	4	11.5	OG45/6FT
125 (5”)	1830	127	63	44	4	12.5	OG50/6FT

Union Clips

Gutter Size	A	B	Product Code
113 (4.5”)	78	44	OG45/UC
125 (5”)	78	44	OG50/UC

Stop Ends

Right Hand External

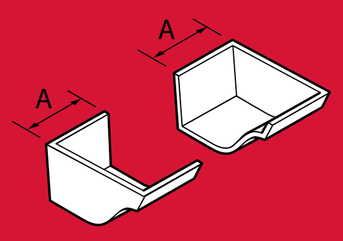

Left Hand Internal

Gutter Size	Type	A	Product Code
113 (4.5”)	External Right Hand	54	OG45/SE/RE
125 (5”)	External Right Hand	54	OG50/SE/RE
113 (4.5”)	External Left Hand	54	OG45/SE/LE
125 (5”)	External Left Hand	54	OG50/SE/LE
113 (4.5”)	Internal Left Hand	44	OG45/SE/LI
125 (5”)	Internal Left Hand	44	OG50/SE/LI

Fascia Brackets

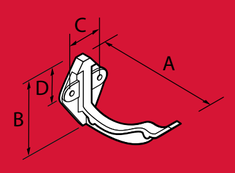

Gutter Size	A	B	C	D	Product Code
113 (4.5”)	137	85	38	38	OG45/FB/CI
125 (5”)	150	92	38	38	OG50/FB/CI

Apex Heritage - Victorian Ogee Gutters & Fittings - Cont.

Running Outlet - with Single Socket

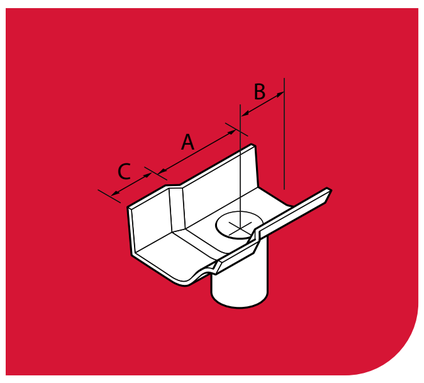

Gutter Size	Pipe Size	B	C	D	Product Code
113 (4.5”)	63	200	121	44	OG45/RO/25
125 (5”)	63	200	121	44	OG50/RO/25
113 (4.5”)	75	200	121	44	OG45/RO/30
125 (5”)	75	200	121	44	OG50/RO/30
125 (5”)	100	200	121	44	OG50/RO/40

90º Angles

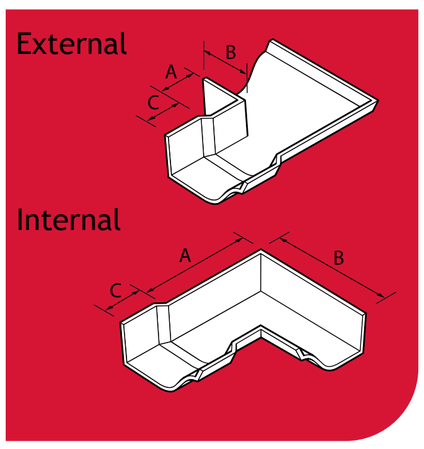

Gutter Size	Type	A	B	C	Product Code
113 (4.5”)	External	28	76	44	OG45/EA/90
125 (5”)	External	28	76	44	OG50/EA/90
113 (4.5”)	Internal	156	206	44	OG45/IA/90
125 (5”)	Internal	159	216	44	OG50/IA/90

120º Angles

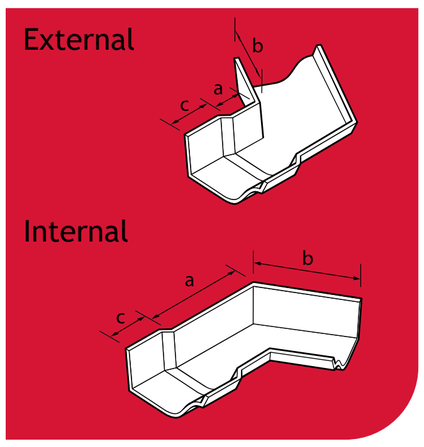

Gutter Size	Type	A	B	C	Product Code
113 (4.5”)	External	28	76	44	OG45/EA/120
125 (5”)	External	28	76	44	OG50/EA/120
113 (4.5”)	Internal	98	149	44	OG45/IA/120
125 (5”)	Internal	105	159	44	OG50/IA/120

135º Angles

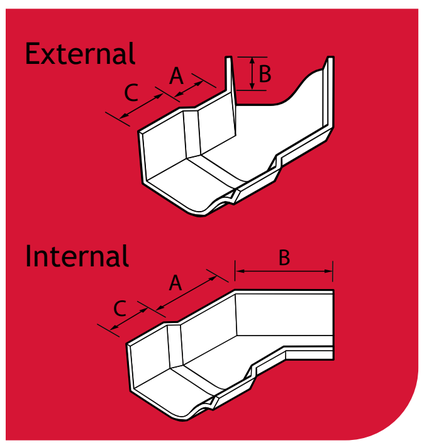

Gutter Size	Type	A	B	C	Product Code
113 (4.5”)	External	28	76	44	OG45/EA/135
125 (5”)	External	28	76	44	OG50/EA/135
113 (4.5”)	Internal	86	130	44	OG45/IA/135
125 (5”)	Internal	86	130	44	OG50/IA/135

Apex Heritage - Moulded Gutters & Fittings

Contents

Available in 3 sizes, Apex Heritage Moulded socketed cast iron gutters have a sharply featured decorative profile. A range of fittings and fixings as illustrated completes the system.

Notes:
All dimensions shown are in mm unless shown otherwise.
Gutter sizes shown are nominal.
T = Thickness (nominal +/- 1mm)
Product codes in the tables refer to primed products.
For painted products add the suffix /PA to the product code reference.

Gutters

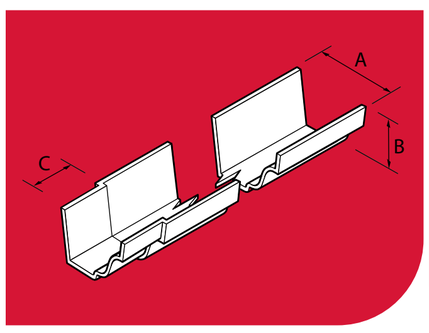

Gutter Size	Gutter Length	A	B	C	T	Weight (KG)	Product Code
100 x 75	1830	108	76	50	4	11	MG43/6FT
125 x 100	1830	140	102	50	4	18	MG54/6FT
150 x 100	1830	162	102	50	4	19	MG64/6FT

Union Clips

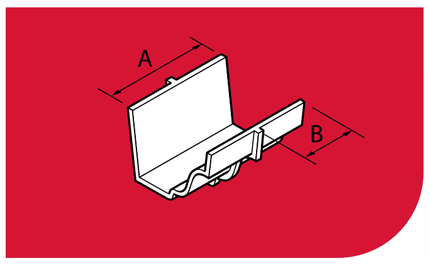

Gutter Size	A	B	Product Code
100 x 75	78	44	MG43/UC
125 x 100	78	44	MG54/UC
150 x 100	78	44	MG64/UC

Stop Ends

Right Hand External

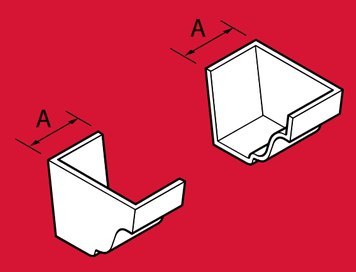

Left Hand Internal

Gutter Size	Type	A	Product Code
100 x 75	External Right Hand	54	MG43/SE/RE
125 x 100	External Right Hand	54	MG54/SE/RE
150 x 100	External Right Hand	54	MG64/SE/RE
100 x 75	Internal Left Hand	51	MG43/SE/LI
125 x 100	Internal Left Hand	51	MG54/SE/LI
150 x 100	Internal Left Hand	51	MG64/SE/LI
100 x 75	Internal Right Hand	51	MG43/SE/RI
125 x 100	Internal Right Hand	51	MG54/SE/RI
150 x 100	Internal Right Hand	51	MG64/SE/RI

Fascia Brackets

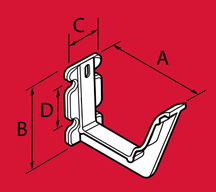

Gutter Size	A	B	C	D	Product Code
100 x 75	135	125	30	85	MG43/FB/CI
125 x 100	170	150	35	110	MG54/FB/CI
150 x 100	190	150	35	118	MG64/FB/CI

Running Outlet - Single Spigot/Socket - Round Pipe

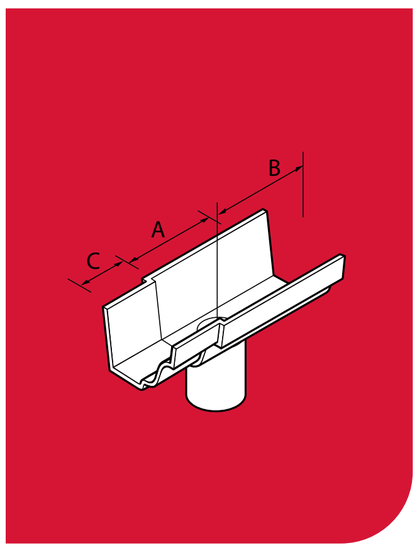

Gutter Size	Round Pipe Size	A	B	C	Product Code
100 x 75	63	251	124	50	MG43/RO/25
125 x 100	63	251	124	50	MG54/RO/25
150 x 100	63	251	124	50	MG64/RO/25
100 x 75	75	251	124	50	MG43/RO/30
125 x 100	75	251	124	50	MG54/RO/30
150 x 100	75	251	124	50	MG64/RO/30
100 x 75	100	251	124	50	MG43/RO/40
125 x 100	100	251	124	50	MG54/RO/40
150 x 100	100	251	124	50	MG64/RO/40

Running Outlet with Single Spigot/Socket - Square Pipe

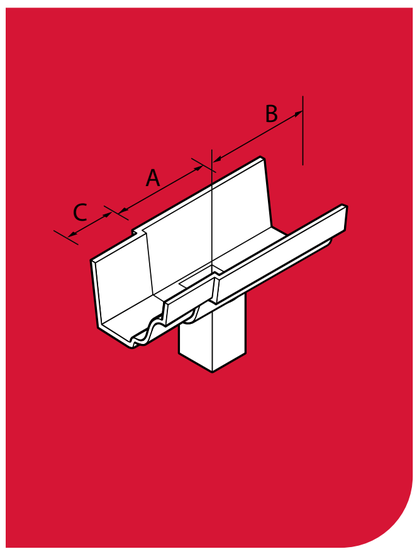

Gutter Size	Round Pipe Size	A	B	C	Product Code
100 x 75	75 x 75	251	124	50	MG43/RO/33
125 x 100	75 x 75	251	124	50	MG54/RO/33
150 x 100	75 x 75	251	124	50	MG64/RO/33
100 x 75	100 x 75	251	124	50	MG43/RO/43
125 x 100	100 x 75	251	124	50	MG54/RO/43
150 x 100	100 x 75	251	124	50	MG64/RO/43
150 x 100	100 x 100	251	124	50	MG64/RO/44
150 x 100	125 x 100	251	124	50	MG64/RO/54

90º Angles

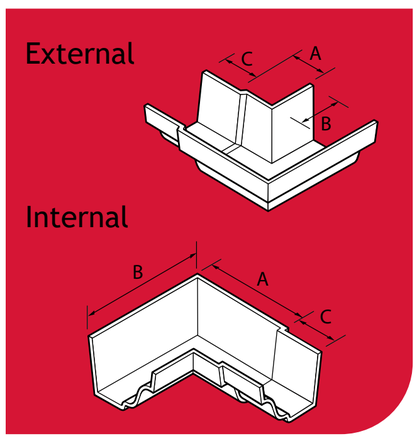

Gutter Size	Type	A	B	C	Product Code
100 x 75	External	28	79	50	MG43/EA/90
125 x 100	External	28	79	50	MG54/EA/90
150 x 100	External	25	70	50	MG64/EA/90
100 x 75	Internal	137	187	50	MG43/IA/90
125 x 100	Internal	168	216	50	MG54/IA/90
150 x 100	Internal	181	229	50	MG64/IA/90

120º Angles

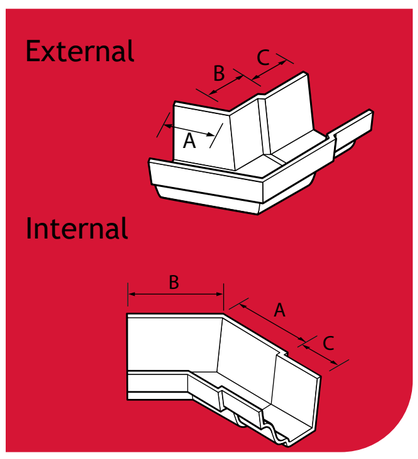

Gutter Size	Type	A	B	C	Product Code
100 x 75	External	35	79	50	MG43/EA/120
125 x 100	External	35	79	50	MG54/EA/120
150 x 100	External	35	79	50	MG64/EA/120
100 x 75	Internal	60	111	50	MG43/IA/120
125 x 100	Internal	111	156	50	MG54/IA/120
150 x 100	Internal	50	168	50	MG64/IA/120

135º Angles

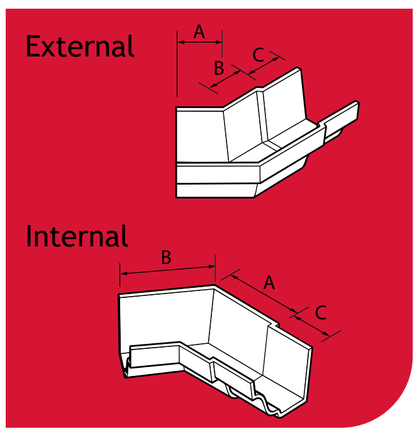

Gutter Size	Type	A	B	C	Product Code
100 x 75	External	28	79	50	MG43/EA/135
125 x 100	External	35	79	50	MG54/EA/135
150 x 100	External	41	89	50	MG64/EA/135
100 x 75	Internal	73	124	50	MG43/IA/135
125 x 100	Internal	89	137	50	MG54/IA/135
150 x 100	Internal	98	140	50	MG64/IA/135

Apex Heritage - Cast Iron Bracketry

Contents

Alumasc can provide traditional style Bracketry for all its standard Apex Heritage gutter profiles. Where building detailing dictates, Alumasc can provide bespoke Bracketry to meet individual project requirements.

Top Fix Rafter Arm - Half Round

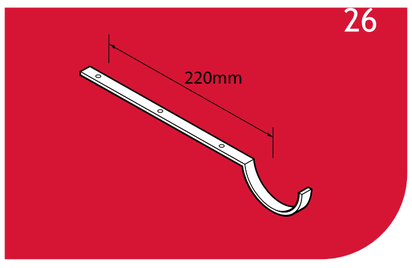

Gutter Size	Product Code
100 (4”)	HG40/RB/TF
113 (4.5”)	HG45/RB/TF
125 (5”)	HG50/RB/TF
150 (6”)	HG60/RB/TF

Top Fix Rafter Arm - Beaded Half Round

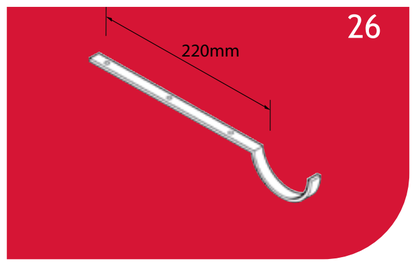

Gutter Size	Product Code
113 (4.5”)	BG45/RB/TF
125 (5”)	BG50/RB/TF

Top Fix Rafter Arm - Victorian Ogee

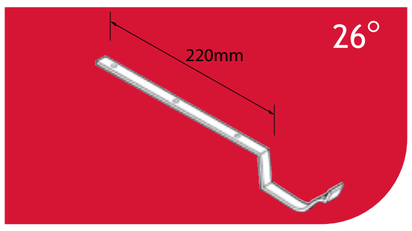

Gutter Size	Product Code
113 (4.5”)	OG45/RB/TF
125 (5”)	OG50/RB/TF

Top Fix Rafter Arm - Moulded

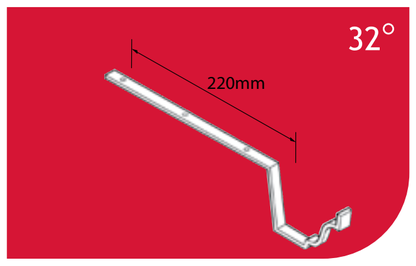

Gutter Size	Product Code
100 x 75	MG43/RB/TF
125 x 100	MG54/RB/TF
150 x 100	MG64/RB/TF

Side Fix Rafter Arm - Half Round

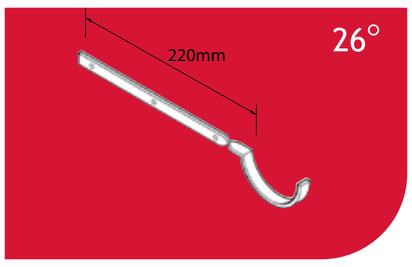

Gutter Size	Product Code
100 (4”)	HG40/RB/SF
113 (4.5”)	HG45/RB/SF
125 (5”)	HG50/RB/SF
150 (6”)	HG60/RB/SF

Side Fix Rafter Arm - Beaded Half Round/Deep Run

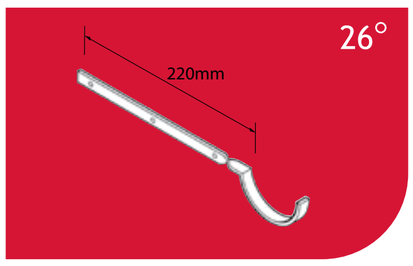

Gutter Size	Product Code
113 (4.5”)	BG45/RB/SF
125 (5”)	BG50/RB/SF

Side Fix Rafter Arm - Victorian Ogee

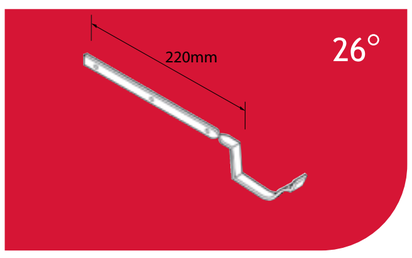

Gutter Size	Product Code
113 (4.5”)	OG45/RB/SF
125 (5”)	OG50/RB/SF

Side Fix Rafter Arm - Moulded

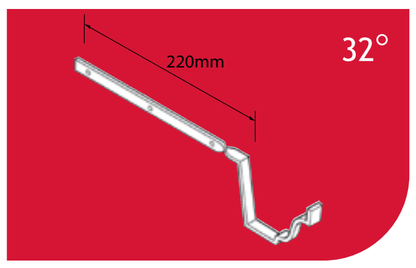

Gutter Size	Product Code
100 x 75	MG43/RB/SF
125 x 100	MG54/RB/SF
150 x 100	MG64/RB/SF

Apex Heritage - Cast Iron Bracketry - Cont.

Contents

Drive in Rise & Fall - Half Round

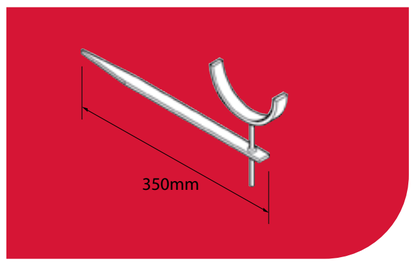

Gutter Size	Product Code
100 (4”)	HG40/R&F/GS
113 (4.5”)	HG45/R&F/GS
125 (5”)	HG50/R&F/GS
150 (6”)	HG60/R&F/GS

Drive in Rise & Fall - Beaded Half Round

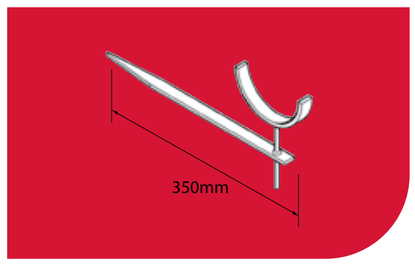

Gutter Size	Product Code
113 (4.5”)	BG45/R&F/GS
125 (5”)	BG50/R&F/GS

Drive in Rise & Fall - Victorian Ogee

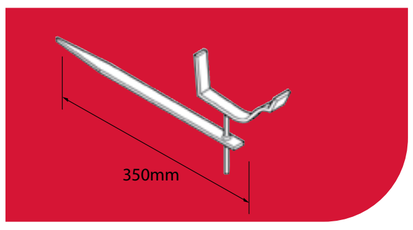

Gutter Size	Product Code
113 (4.5”)	OG45/R&F/GS
125 (5”)	OG50/R&F/GS

Drive in Rise & Fall - Moulded

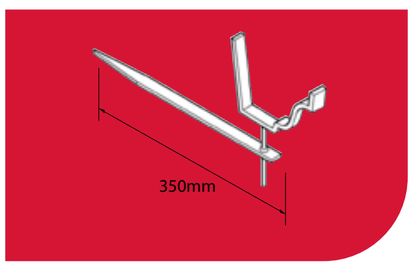

Gutter Size	Product Code
100 x 75	MG43/R&F/GS
125 x 100	MG54/R&F/GS
150 x 100	MG64/R&F/GS

Drive in Rise & Fall with 330mm Stay - Half Round

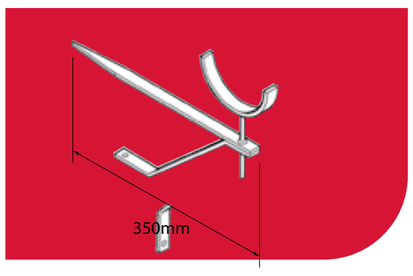

Gutter Size	Product Code
100 (4”)	HG40/R&F/WS
113 (4.5”)	HG45/R&F/WS
125 (5”)	HG50/R&F/WS
150 (6”)	HG60/R&F/WS

Drive in Rise & Fall with 330mm Stay - Beaded Half Round

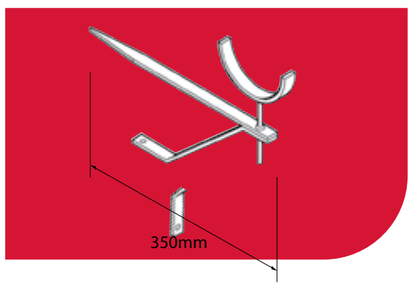

Gutter Size	Product Code
113 (4.5”)	BG45/R&F/WS
125 (5”)	BG50/R&F/WS

Drive in Rise & Fall with 330mm Stay - Victorian Ogee

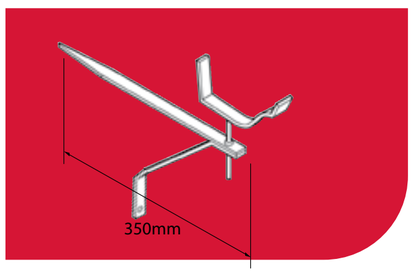

Gutter Size	Product Code
113 (4.5”)	OG45/R&F/WS
125 (5”)	OG50/R&F/WS

Drive in Rise & Fall with 330mm Stay - Moulded

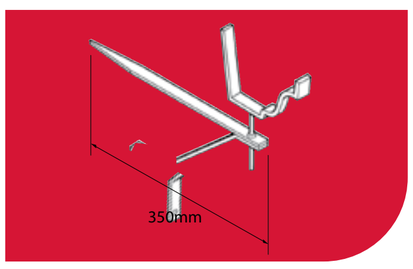

Gutter Size	Product Code
100 x 75	MG43/R&F/WS
125 x 100	MG54/R&F/WS
150 x 100	MG64/R&F/WS

Bespoke Bracketry

Alumasc can design and manufacture a variety of Bracketry solutions for gutters and pipes to create an integrated system solution. Such detailing can often be used to support fascia and soffit configurations.

Ornate holderbats and earbelts can be detailed to provide a unique, distinguished appearance to a rainwater stack.

Where standard fitting dimensions do not suit the project’s requirements, Alumasc can fabricate its gutter and pipe Bracketry systems to accommodate building design.

Apex Heritage - Circular Pipes & Fittings

Contents

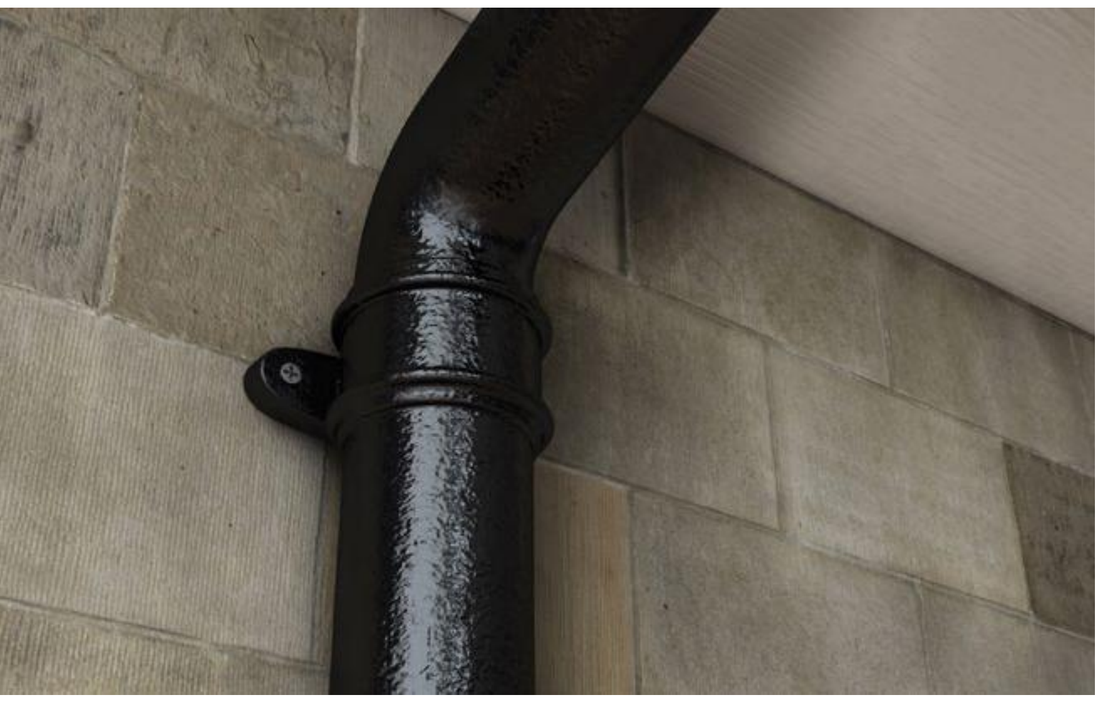

A range of traditional cast iron socketed round rainwater pipes in a choice of 3 pipe diameters and 2 pipe lengths. There is a comprehensive range of cast iron fittings, and traditional holderbat and earbelt fixings. Cast iron rainwater hopper heads are also available to suit.

Notes:
All dimensions shown are in mm unless shown otherwise.
Pipe sizes shown are nominal.
Product codes in the tables refer to primed products.
For painted products add the suffix /PA to the product code reference.

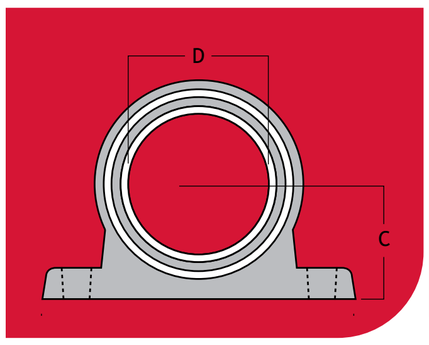

Sockets (Nominal)	63	75	100
A Width of flange	146	162	191
B Depth of socket	63.5	63.5	63.5
C Distance of centre to wall	48	54	67
D Internal dia	73	90	111

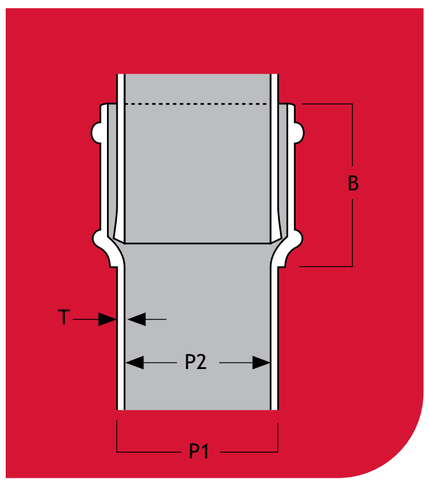

Pipes (Nominal)	63	75	100
P1 External dia	63.5	82.5	108
P2 Internal dia	57	70	95
T Thickness	3	3	3

Notes:

If bends with ears are required, add one of the following suffixes to the Product Code according to its intended use:

- front bend /FE
- back bend /BE
- lefthand bend /LE
- righthand bend /RE

If plinth offsets with ears are required, add suffix PE to the Product Code.

Swan-necks can also be used as side offsets. If side offsets with ears are required, add one of the following suffixes to the Product Code according to its intended use:

- lefthand side offset /LE
- righthand side offset /RE

Shoes can also be used as side shoes. If side shoes with ears are required, add one of the following suffixes to the Product Code according to its intended use:

- lefthand side shoe /LE
- righthand side shoe /RE

If shoes with ears are required, add suffix E to the Product Code.

If ears are required on single branches or diminishing pieces, please contact Alumasc Technical Services department for further details.

Should projections other than those shown be required for plinth offsets or swan-necks, please contact Alumasc Technical Services for further details.

Non eared pipes require holderbats for fixing from the made to order range.

Contents

Pipes - With and Without Ears

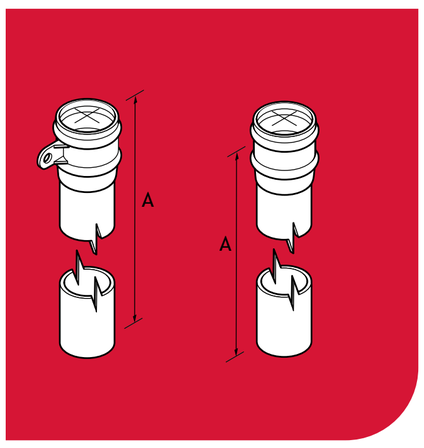

Pipe Size	A	Product Code
63	915	P25/3FT
75	915	P30/3FT
100	915	P40/3FT
63	1830	P25/6FT
75	1830	P30/6FT
100	1830	P40/6FT

Bends

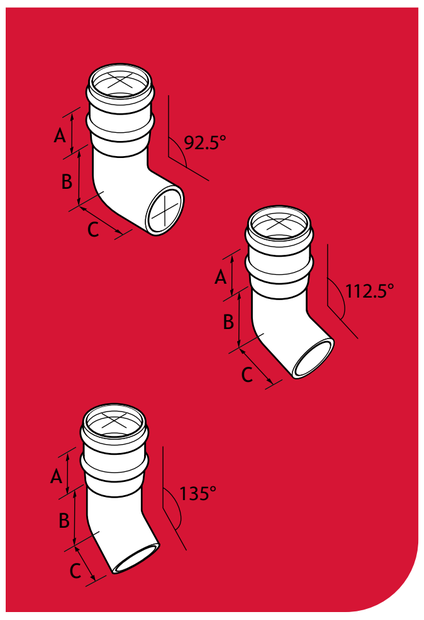

Pipe Size	Bend	A	B	C	Product Code
63	92.5 Degree	63	76	140	P25/B/92
75	92.5 Degree	63	83	146	P30/B/92
100	92.5 Degree	63	95	159	P40/B/92
63	112.5 Degree	63	57	121	P25/B/112
75	112.5 Degree	63	60	124	P30/B/112
100	112.5 Degree	63	70	133	P40/B/112
63	135 Degree	63	44	108	P25/B/135
75	135 Degree	63	48	111	P30/B/135
100	135 Degree	63	51	114	P40/B/135

Branches

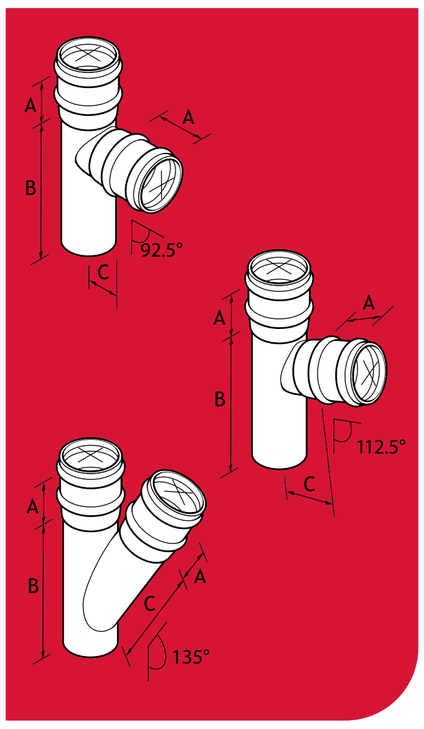

Pipe Size	Branches	A	B	C	Product Code
63	92.5 Degree	63	210	79	P25/BR/92
75	92.5 Degree	63	229	79	P30/BR/92
100	92.5 Degree	63	267	98	P40/BR/92
63	112.5 Degree	63	210	79	P25/BR/112
75	112.5 Degree	63	229	89	P30/BR/112
100	112.5 Degree	63	267	108	P40/BR/112
63	135 Degree	63	210	108	P25/BR/135
75	135 Degree	63	229	124	P30/BR/135
100	135 Degree	63	267	152	P40/BR/135

Drive in Pipe Support

Note: Drive in pipe supports should not replace eared sockets or holderbats as a fixing system. They are for additional support on long horizontal runs only

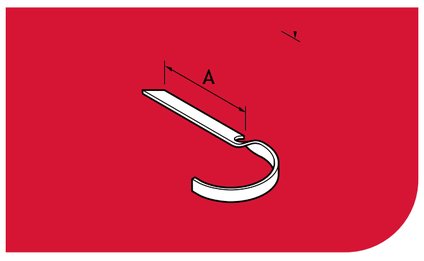

Pipe Size	A	Product Code
63	300	P25/HF
75	300	P30/HF
100	300	P40/HF

Contents

Side Offsets, Plinth Offsets and Swan Necks

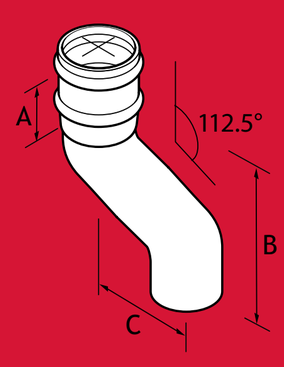

Pipe Size	Branches	A	B	C	Product Code
63	112.5 Degree	63	190	76	P25/OF/03
63	112.5 Degree	63	210	114	P25/OF/04
63	112.5 Degree	63	225	152	P25/OF/06
63	112.5 Degree	63	257	229	P25/OF/09
63	112.5 Degree	63	289	306	P25/OF/12
63	112.5 Degree	63	321	381	P25/OF/15
63	112.5 Degree	63	352	457	P25/OF/18
75	112.5 Degree	63	200	76	P30/OF/03
75	112.5 Degree	63	216	114	P30/OF/04
75	112.5 Degree	63	232	152	P30/OF/06
75	112.5 Degree	63	264	229	P30/OF/09
75	112.5 Degree	63	295	306	P30/OF/12
75	112.5 Degree	63	327	381	P30/OF/15
75	112.5 Degree	63	359	457	P30/OF/18
100	112.5 Degree	63	219	76	P40/OF/03
100	112.5 Degree	63	235	114	P40/OF/04
100	112.5 Degree	63	248	152	P40/OF/06
100	112.5 Degree	63	279	229	P40/OF/09
100	112.5 Degree	63	311	306	P40/OF/12
100	112.5 Degree	63	343	381	P40/OF/15
100	112.5 Degree	63	375	457	P40/OF/18

Note:
If offsets with ears are required, add one of the following suffixes to the Product Code:
Left Hand Side Offset /LE
Right Hand Side Offset /RE.
Other sizes are available on request.

Access Pipes - Without Ears

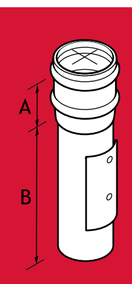

Pipe Size	A	B	Product Code
63	63	343	P25/AP/NE
75	63	343	P30/AP/NE
100	63	343	P40/AP/NE

Access Pipes - With Ears

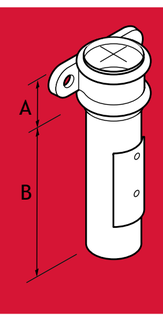

Pipe Size	A	B	Product Code
63	63	343	P25/AP
75	63	343	P30/AP
100	63	343	P40/AP

Contents

Diminishing Pieces

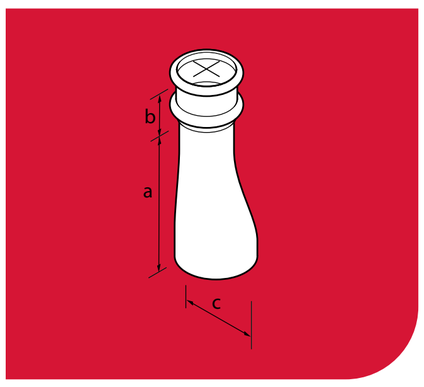

Pipe Size	A	B	C	Product Code
100	140	63	63	P40/DIM/25
100	140	63	76	P40/DIM/30

Shoes

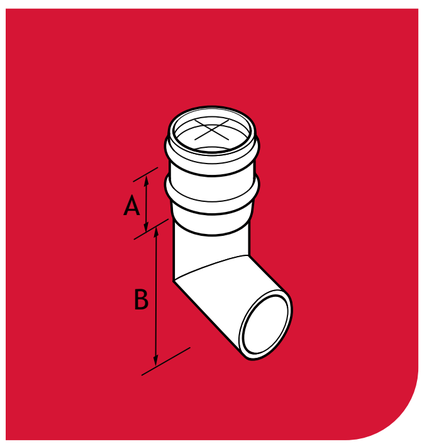

Pipe Size	Type	A	B	C	Product Code
63	Regular	63	102		P25/SH
75	Regular	63	114		P30/SH
100	Regular	63	143		P40/SH
63	Anti-splash	63	159	149	P25/SH/A
75	Anti-splash	63	175	171	P30/SH/A
100	Anti-splash	63	197	206	P40/SH/A

Rainwater Heads

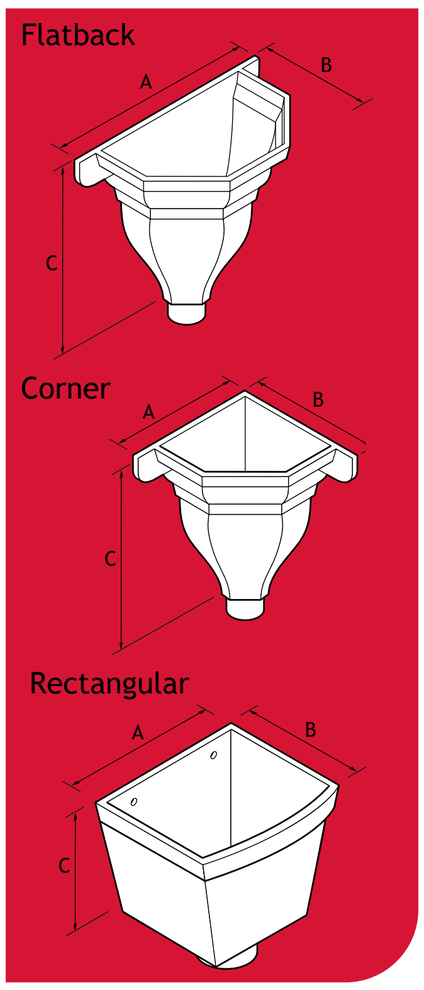

Pipe Size	Type	A	B	C	Product Code
63	Flatback	298	190	210	HH/001/25F
75	Flatback	298	190	210	HH/001/30F
100	Flatback	337	229	241	HH/001/40F
63	Corner	210	210	210	HH/001/25C
75	Corner	210	210	210	HH/001/30C
100	Corner	235	235	241	HH/001/40C
63	Small Rectangular	254	178	178	HH/002/25
75	Small Rectangular	254	178	178	HH/002/30
100	Small Rectangular	254	178	178	HH/002/40
63	Large Rectangular	305	250	250	HH/003/25
75	Large Rectangular	305	250	250	HH/003/30
100	Large Rectangular	305	254	203	HH/003/40

Apex Heritage - Square & Rectangluar Pipes & Fittings

Contents

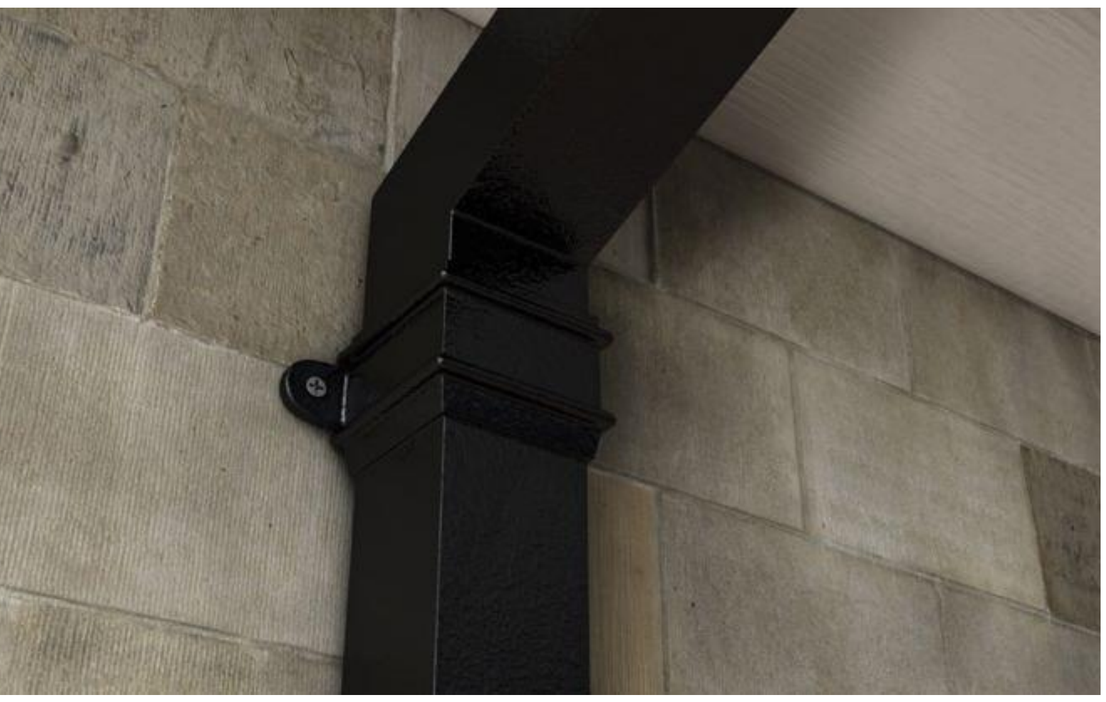

A range of traditional cast iron socketed square and rectangular rainwater pipes in a choice of 5 pipe sizes and 2 pipe lengths. There is a comprehensive range of cast iron fittings and traditional earbelt fixings. Cast iron rainwater hopper heads are also available to suit.

Notes:
All dimensions shown are in mm unless shown otherwise.
Pipe sizes shown are nominal.
Product codes in the tables refer to primed products.
For painted products add the suffix /PA to the product code reference.

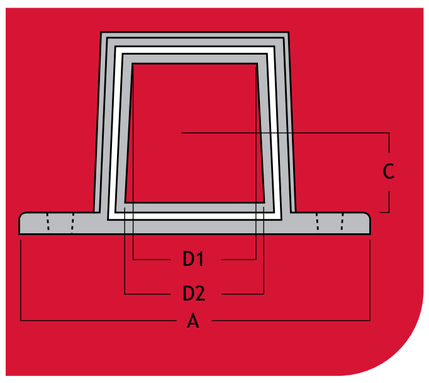

Sockets (Nominal)	75 x 75	100 x 75	100 x 100	125 x 100	150 x 100
A Width of flange	180	205	205	230	250
B Depth of socket	83	83	108	108	108
C Distance of centre to wall	50	50	65	65	65
D1 Internal dimension front	86	111	111	136.5	162
D2 Internal dimension front	89	114	114	140	165

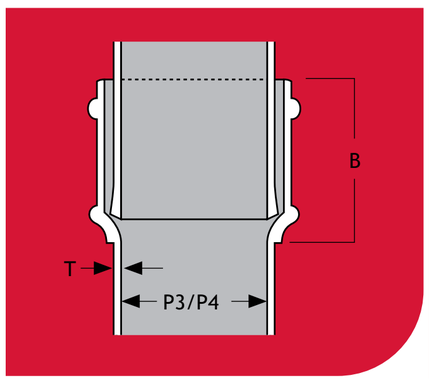

Pipes (Nominal)	75 x 75	100 x 75	100 x 100	125 x 100	150 x 100
P1 External dimension front	82.5	108	108	133.5	159
P2 External dimension back	86	111	111	136.5	162
P3 Internal dimension front	70	95.5	95.5	121	146
P4 Internal dimension back	73	98.5	98.5	124	149
T Thickness	6.5	6.5	6.5	6.5	6.5

Notes:

Dimensions of rectangular pipes are given with the width as viewed from the front first, followed by the depth, front to back- eg, 150 wide x 100 depth.

If ears are required, add suffix /E to the Product Code.

If ears are required on single branches or swan-necks, please contact our Customer Services department for further details.

Shoes can also be used as side shoes. If side shoes with ears are required, add one of the following suffixes to the Product Code according to its intended use:

- lefthand side shoe /LE
- righthand side shoe /RE

Should projections other than those shown be required for swan-necks, plinth offsets or side offsets, please contact Alumasc Technical Services department for further details.

The majority of fittings illustrated in this section are available 'From stock'. However, extended lead times might be required for some items.

Non eared pipes require holderbats for fixing from the made to order range.

Pipes - With and Without Ears

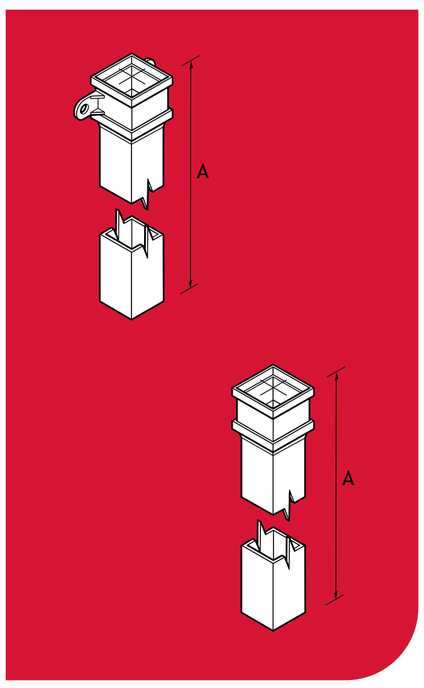

Pipe Size	A	Product Code
75 x 75	915	P33/3FT
75 x 100	915	P43/3FT
100 x 100	915	P44/3FT
125 x 100	915	P54/3FT
150 x 100	915	P64/3FT
75 x 75	1830	P33/6FT
75 x 100	1830	P43/6FT
100 x 100	1830	P44/6FT
125 x 100	1830	P54/6FT
150 x 100	1830	P64/6FT

Apex Heritage - Square & Rectangluar Pipes & Fittings - Cont.

Contents

Bends - Front/Back

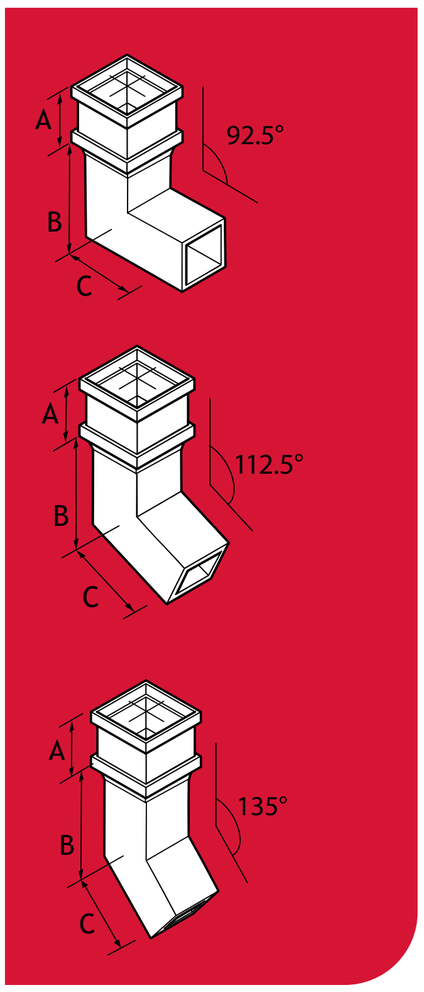

Pipe Size	Bend	A	B	C	Product Code
75 x 75	92.5 Degree	82	83	165	P33/B/92B/F
75 x 100	92.5 Degree	82	83	165	P43/B/92B/F
100 x 100	92.5 Degree	82	95	178	P44/B/92B/F
125 x 100	92.5 Degree	82	95	178	P54/B/92B/F
150 x 100	92.5 Degree	82	95	178	P64/B/92B/F
75 x 75	112.5 Degree	82	60	143	P33/B/112B/F
75 x 100	112.5 Degree	82	60	143	P43/B/112B/F
100 x 100	112.5 Degree	82	70	152	P44/B/112B/F
125 x 100	112.5 Degree	82	70	152	P54/B/112B/F
150 x 100	112.5 Degree	82	70	152	P64/B/112B/F
75 x 75	135 Degree	82	48	130	P33/B/135B/F
75 x 100	135 Degree	82	48	130	P43/B/135B/F
100 x 100	135 Degree	82	51	133	P44/B/135B/F
125 x 100	135 Degree	82	51	133	P54/B/135B/F
150 x 100	135 Degree	82	51	133	P64/B/135B/F

Bends - Left/Right

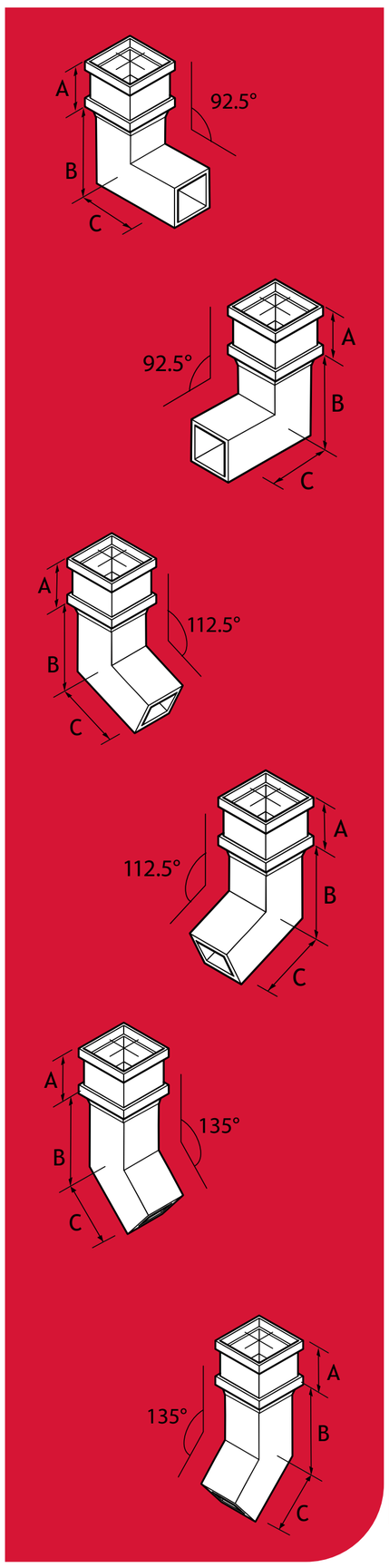

Pipe Size	Type	Angle	A	B	C	Product Code
75 x 75	Left	92.5 Degree	82	108	190	P33/B/92L
75 x 100	Left	92.5 Degree	82	121	203	P43/B/92L
100 x 100	Left	92.5 Degree	82	121	203	P44/B/92L
125 x 100	Left	92.5 Degree	82	133	216	P54/B/92L
150 x 100	Left	92.5 Degree	82	146	229	P64/B/92L
75 x 75	Right	92.5 Degree	82	108	190	P33/B/92R
75 x 100	Right	92.5 Degree	82	121	203	P43/B/92R
100 x 100	Right	92.5 Degree	82	121	203	P44/B/92R
125 x 100	Right	92.5 Degree	82	133	216	P54/B/92R
150 x 100	Right	92.5 Degree	82	146	229	P64/B/92R
75 x 75	Left	112.5 Degree	82	86	168	P33/B/112L
75 x 100	Left	112.5 Degree	82	95	178	P43/B/112L
100 x 100	Left	112.5 Degree	82	95	178	P44/B/112L
125 x 100	Left	112.5 Degree	82	105	187	P54/B/112L
150 x 100	Left	112.5 Degree	82	114	197	P64/B/112L
75 x 75	Right	112.5 Degree	82	86	168	P33/B/112R
75 x 100	Right	112.5 Degree	82	95	178	P43/B/112R
100 x 100	Right	112.5 Degree	82	95	178	P44/B/112R
125 x 100	Right	112.5 Degree	82	105	187	P54/B/112R
150 x 100	Right	112.5 Degree	82	114	197	P64/B/112R
75 x 75	Left	135 Degree	82	73	156	P33/B/135L
75 x 100	Left	135 Degree	82	76	158	P43/B/135L
100 x 100	Left	135 Degree	82	76	158	P44/B/135L
125 x 100	Left	135 Degree	82	83	165	P54/B/135L
150 x 100	Left	135 Degree	82	89	171	P64/B/135L
75 x 75	Right	135 Degree	82	73	156	P33/B/135R
75 x 100	Right	135 Degree	82	76	158	P43/B/135R
100 x 100	Right	135 Degree	82	76	158	P44/B/135R
125 x 100	Right	135 Degree	82	83	165	P54/B/135R
150 x 100	Right	135 Degree	82	89	171	P64/B/135R

Contents

Branches

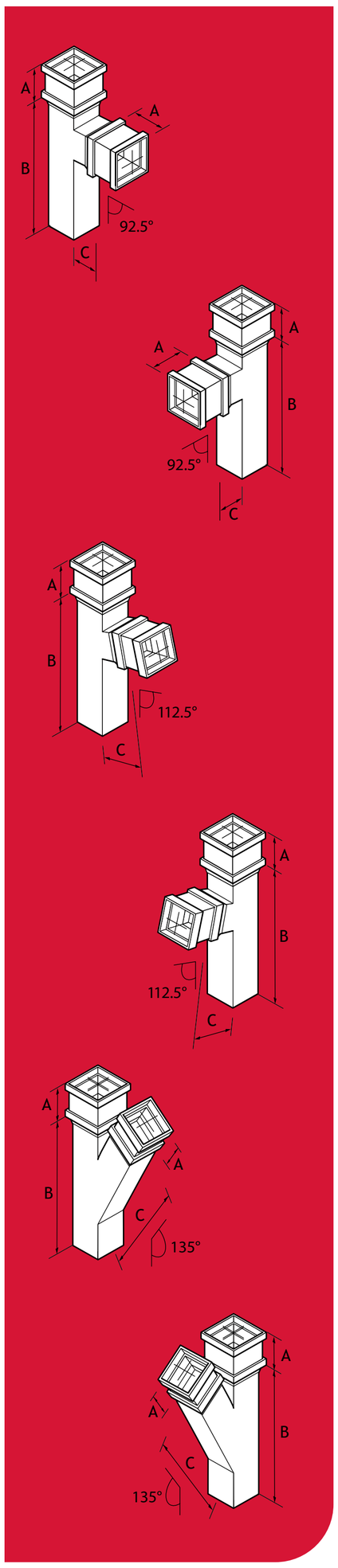

Pipe Size	Type	Angle	A	B	C	Product Code
75 x 75	Left	92.5 Degree	82	273	83	P33/BR/92L
75 x 100	Left	92.5 Degree	82	298	98	P43/BR/92L
100 x 100	Left	92.5 Degree	82	298	98	P44/BR/92L
125 x 100	Left	92.5 Degree	82	324	111	P54/BR/92L
150 x 100	Left	92.5 Degree	82	349	124	P64/BR/92L
75 x 75	Right	92.5 Degree	82	273	83	P33/BR/92R
75 x 100	Right	92.5 Degree	82	298	98	P43/BR/92R
100 x 100	Right	92.5 Degree	82	298	98	P44/BR/92R
125 x 100	Right	92.5 Degree	82	324	111	P54/BR/92R
150 x 100	Right	92.5 Degree	82	349	124	P64/BR/92R
75 x 75	Left	112.5 Degree	82	273	102	P33/BR/112L
75 x 100	Left	112.5 Degree	82	298	121	P43/BR/112L
100 x 100	Left	112.5 Degree	82	298	121	P44/BR/112L
125 x 100	Left	112.5 Degree	82	324	146	P54/BR/112L
150 x 100	Left	112.5 Degree	82	349	159	P64/BR/112L
75 x 75	Right	112.5 Degree	82	273	102	P33/BR/112R
75 x 100	Right	112.5 Degree	82	298	121	P43/BR/112R
100 x 100	Right	112.5 Degree	82	298	121	P44/BR/112R
125 x 100	Right	112.5 Degree	82	324	146	P54/BR/112R
150 x 100	Right	112.5 Degree	82	349	159	P64/BR/112R
75 x 75	Left	135 Degree	82	340	146	P33/BR/135L
75 x 100	Left	135 Degree	82	375	175	P43/BR/135L
100 x 100	Left	135 Degree	82	375	175	P44/BR/135L
125 x 100	Left	135 Degree	82	416	203	P54/BR/135L
150 x 100	Left	135 Degree	82	451	235	P64/BR/135L
75 x 75	Right	135 Degree	82	340	146	P33/BR/135R
75 x 100	Right	135 Degree	82	375	175	P43/BR/135R
100 x 100	Right	135 Degree	82	375	175	P44/BR/135R
125 x 100	Right	135 Degree	82	416	203	P54/BR/135R
150 x 100	Right	135 Degree	82	451	235	P64/BR/135R

Note: If branches with ears are required, add suffix /E to the Product Code.

Contents

Offsets - Left/Right 75 x 75

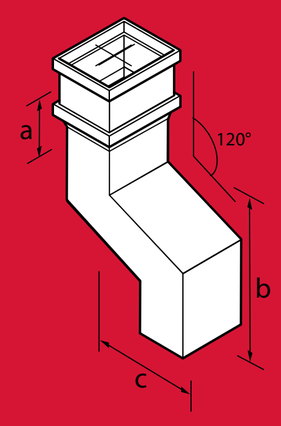

Pipe Size	Type	Angle	A	B	C	Product Code
75 x 75	Left	112.5 Degree	82	286	76	P33/OF/03L
75 x 75	Left	112.5 Degree	82	302	114	P33/OF/04L
75 x 75	Left	112.5 Degree	82	317	152	P33/OF/06L
75 x 75	Left	112.5 Degree	82	349	228	P33/OF/09L
75 x 75	Left	112.5 Degree	82	381	305	P33/OF/12L
75 x 75	Left	112.5 Degree	82	413	381	P33/OF/15L
75 x 75	Left	112.5 Degree	82	444	457	P33/OF/18L
75 x 75	Right	112.5 Degree	82	286	76	P33/OF/03R
75 x 75	Right	112.5 Degree	82	302	114	P33/OF/04R
75 x 75	Right	112.5 Degree	82	317	152	P33/OF/06R
75 x 75	Right	112.5 Degree	82	349	228	P33/OF/09R
75 x 75	Right	112.5 Degree	82	381	305	P33/OF/12R
75 x 75	Right	112.5 Degree	82	413	381	P33/OF/15R
75 x 75	Right	112.5 Degree	82	444	457	P33/OF/18R
75 x 75	Swan Neck	120 Degree	82	286	76	P33/OF/03
75 x 75	Swan Neck	120 Degree	82	302	114	P33/OF/04
75 x 75	Swan Neck	120 Degree	82	317	152	P33/OF/06
75 x 75	Swan Neck	120 Degree	82	349	228	P33/OF/09
75 x 75	Swan Neck	120 Degree	82	381	305	P33/OF/12
75 x 75	Swan Neck	120 Degree	82	413	381	P33/OF/15
75 x 75	Swan Neck	120 Degree	82	444	457	P33/OF/18
75 x 75	Plinth Offset	135 Degree	82	317	63	P33/OF/02P
75 x 75	Plinth Offset	135 Degree	82	330	76	P33/OF/03P
75 x 75	Plinth Offset	135 Degree	82	368	114	P33/OF/04P
75 x 75	Plinth Offset	135 Degree	82	368	152	P33/OF/06P

Offsets - Left/Right 100 x 75

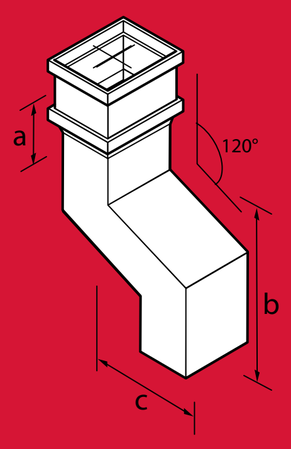

Pipe Size	Type	Angle	A	B	C	Product Code
100 x 75	Left	112.5 Degree	82	302	76	P43/OF/03L
100 x 75	Left	112.5 Degree	82	317	114	P43/OF/04L
100 x 75	Left	112.5 Degree	82	333	152	P43/OF/06L
100 x 75	Left	112.5 Degree	82	365	228	P43/OF/09L
100 x 75	Left	112.5 Degree	82	397	305	P43/OF/12L
100 x 75	Left	112.5 Degree	82	429	381	P43/OF/15L
100 x 75	Left	112.5 Degree	82	460	457	P43/OF/18L
100 x 75	Right	112.5 Degree	82	302	76	P43/OF/03R
100 x 75	Right	112.5 Degree	82	317	114	P43/OF/04R
100 x 75	Right	112.5 Degree	82	333	152	P43/OF/06R
100 x 75	Right	112.5 Degree	82	365	228	P43/OF/09R
100 x 75	Right	112.5 Degree	82	379	305	P43/OF/12R
100 x 75	Right	112.5 Degree	82	429	381	P43/OF/15R
100 x 75	Right	112.5 Degree	82	460	457	P43/OF/18R
100 x 75	Swan Neck	120 Degree	82	302	76	P43/OF/03
100 x 75	Swan Neck	120 Degree	82	317	114	P43/OF/04
100 x 75	Swan Neck	120 Degree	82	333	152	P43/OF/06
100 x 75	Swan Neck	120 Degree	82	365	228	P43/OF/09
100 x 75	Swan Neck	120 Degree	82	397	305	P43/OF/12
100 x 75	Swan Neck	120 Degree	82	429	381	P43/OF/15
100 x 75	Swan Neck	120 Degree	82	460	457	P43/OF/18
100 x 75	Plinth Offset	135 Degree	82	317	63	P43/OF/02P
100 x 75	Plinth Offset	135 Degree	82	330	76	P43/OF/03P
100 x 75	Plinth Offset	135 Degree	82	368	114	P43/OF/04P
100 x 75	Plinth Offset	135 Degree	82	406	152	P43/OF/06P

Offsets - Left/Right 100 x 100

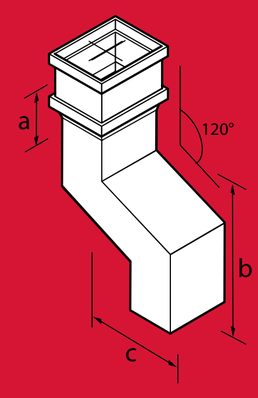

Pipe Size	Type	Angle	A	B	C	Product Code
100 x 100	Left	112.5 Degree	82	302	76	P44/OF/03L
100 x 100	Left	112.5 Degree	82	317	114	P44/OF/04L
100 x 100	Left	112.5 Degree	82	333	152	P44/OF/06L
100 x 100	Left	112.5 Degree	82	365	228	P44/OF/09L
100 x 100	Left	112.5 Degree	82	397	305	P44/OF/12L
100 x 100	Left	112.5 Degree	82	429	381	P44/OF/15L
100 x 100	Left	112.5 Degree	82	460	457	P44/OF/18L
100 x 100	Right	112.5 Degree	82	302	76	P44/OF/03R
100 x 100	Right	112.5 Degree	82	317	114	P44/OF/04R
100 x 100	Right	112.5 Degree	82	333	152	P44/OF/06R
100 x 100	Right	112.5 Degree	82	365	228	P44/OF/09R
100 x 100	Right	112.5 Degree	82	397	305	P44/OF/12R
100 x 100	Right	112.5 Degree	82	429	381	P44/OF/15R
100 x 100	Right	112.5 Degree	82	460	457	P44/OF/18R
100 x 100	Swan Neck	120 Degree	82	302	76	P44/OF/03
100 x 100	Swan Neck	120 Degree	82	317	114	P44/OF/04
100 x 100	Swan Neck	120 Degree	82	333	152	P44/OF/06
100 x 100	Swan Neck	120 Degree	82	365	228	P44/OF/09
100 x 100	Swan Neck	120 Degree	82	397	305	P44/OF/12
100 x 100	Swan Neck	120 Degree	82	429	381	P44/OF/15
100 x 100	Swan Neck	120 Degree	82	460	457	P44/OF/18
100 x 100	Plinth Offset	135 Degree	82	324	63	P44/OF/02P
100 x 100	Plinth Offset	135 Degree	82	340	76	P44/OF/03P
100 x 100	Plinth Offset	135 Degree	82	375	114	P44/OF/04P
100 x 100	Plinth Offset	135 Degree	82	416	152	P44/OF/06P

Offsets - Left/Right 125 x 100

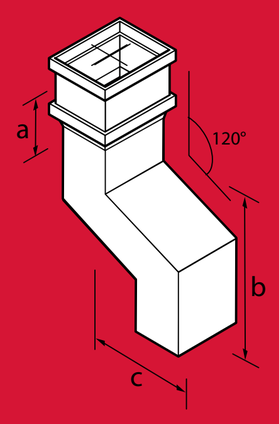

Pipe Size	Type	Angle	A	B	C	Product Code
125 x 100	Left	112.5 Degree	82	317	76	P54/OF/03L
125 x 100	Left	112.5 Degree	82	333	114	P54/OF/04L
125 x 100	Left	112.5 Degree	82	349	152	P54/OF/06L
125 x 100	Left	112.5 Degree	82	381	228	P54/OF/09L
125 x 100	Left	112.5 Degree	82	413	305	P54/OF/12L
125 x 100	Left	112.5 Degree	82	444	381	P54/OF/15L
125 x 100	Left	112.5 Degree	82	476	457	P54/OF/18L
125 x 100	Right	112.5 Degree	82	317	76	P54/OF/03R
125 x 100	Right	112.5 Degree	82	333	114	P54/OF/04R
125 x 100	Right	112.5 Degree	82	349	152	P54/OF/06R
125 x 100	Right	112.5 Degree	82	381	228	P54/OF/09R
125 x 100	Right	112.5 Degree	82	413	305	P54/OF/12R
125 x 100	Right	112.5 Degree	82	444	381	P54/OF/15R
125 x 100	Right	112.5 Degree	82	476	457	P54/OF/18R
125 x 100	Swan Neck	120 Degree	82	317	76	P54/OF/03
125 x 100	Swan Neck	120 Degree	82	333	114	P54/OF/04
125 x 100	Swan Neck	120 Degree	82	349	152	P54/OF/06
125 x 100	Swan Neck	120 Degree	82	381	228	P54/OF/09
125 x 100	Swan Neck	120 Degree	82	413	305	P54/OF/12
125 x 100	Swan Neck	120 Degree	82	444	381	P54/OF/15
125 x 100	Swan Neck	120 Degree	82	476	457	P54/OF/18
125 x 100	Plinth Offset	135 Degree	82	324	63	P54/OF/02P
125 x 100	Plinth Offset	135 Degree	82	340	76	P54/OF/03P
125 x 100	Plinth Offset	135 Degree	82	375	114	P54/OF/04P
125 x 100	Plinth Offset	135 Degree	82	416	152	P54/OF/06P

Contents

Offsets - Left/Right 150 x 100

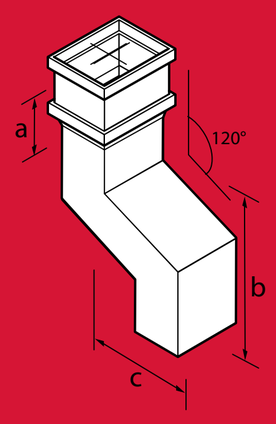

Pipe Size	Type	Angle	A	B	C	Product Code
150 x 100	Left	112.5 Degree	82	337	76	P64/OF/03L
150 x 100	Left	112.5 Degree	82	352	114	P64/OF/04L
150 x 100	Left	112.5 Degree	82	368	152	P64/OF/06L
150 x 100	Left	112.5 Degree	82	400	228	P64/OF/09L
150 x 100	Left	112.5 Degree	82	432	305	P64/OF/12L
150 x 100	Left	112.5 Degree	82	464	381	P64/OF/15L
150 x 100	Left	112.5 Degree	82	495	457	P64/OF/18L
150 x 100	Right	112.5 Degree	82	337	76	P64/OF/03R
150 x 100	Right	112.5 Degree	82	352	114	P64/OF/04R
150 x 100	Right	112.5 Degree	82	368	152	P64/OF/06R
150 x 100	Right	112.5 Degree	82	400	228	P64/OF/09R
150 x 100	Right	112.5 Degree	82	432	305	P64/OF/12R
150 x 100	Right	112.5 Degree	82	464	381	P64/OF/15R
150 x 100	Right	112.5 Degree	82	495	457	P64/OF/18R
150 x 100	Swan Neck	120 Degree	82	337	76	P64/OF/03
150 x 100	Swan Neck	120 Degree	82	352	114	P64/OF/04
150 x 100	Swan Neck	120 Degree	82	368	152	P64/OF/06
150 x 100	Swan Neck	120 Degree	82	400	228	P64/OF/09
150 x 100	Swan Neck	120 Degree	82	432	305	P64/OF/12
150 x 100	Swan Neck	120 Degree	82	464	381	P64/OF/15
150 x 100	Swan Neck	120 Degree	82	495	457	P64/OF/18
150 x 100	Plinth Offset	135 Degree	82	324	63	P64/OF/02P
150 x 100	Plinth Offset	135 Degree	82	340	76	P64/OF/03P
150 x 100	Plinth Offset	135 Degree	82	375	114	P64/OF/04P
150 x 100	Plinth Offset	135 Degree	82	416	152	P64/OF/06P

Note: If ears are required on 112.5° and 135° offsets, add suffix /E to the Product Code.

Apex Heritage - Square & Rectangluar Pipes & Fittings - Cont.

Contents

Shoes

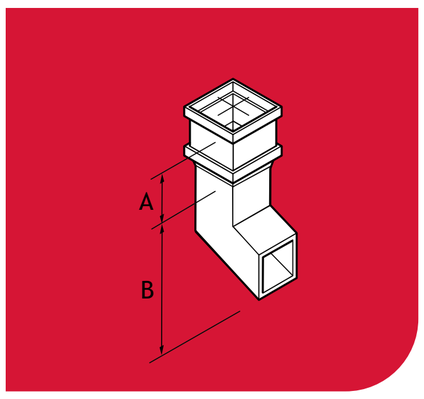

Pipe Size	A	B	Product Code
75 x 75	82	159	P33/SH
100 x 75	82	159	P43/SH
100 x 100	82	184	P44/SH
125 x 100	82	184	P54/SH
150 x 100	82	184	P64/SH

Anti Splash Shoes

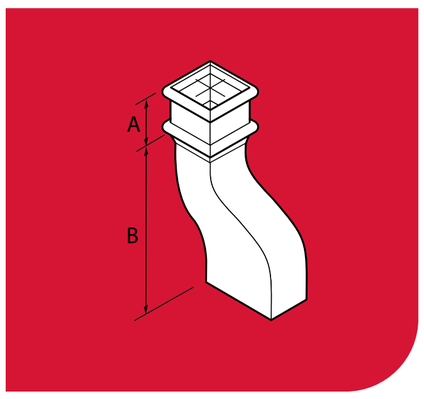

Pipe Size	A	B	Product Code
75 x 75	82	171	P33/SH/A
100 x 75	82	171	P43/SH/A
100 x 100	82	197	P44/SH/A
125 x 100	82	197	P54/SH/A
150 x 100	82	197	P64/SH/A

Corner Shoes

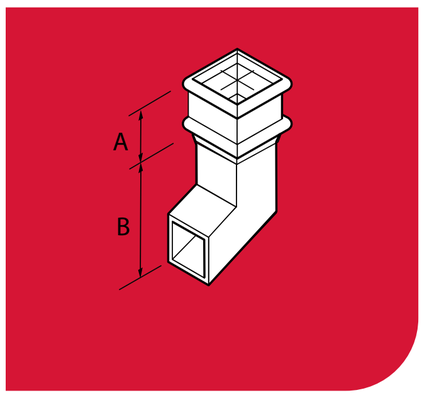

Pipe Size	A	B	Product Code
75 x 75	82	187	P33/SH/C
100 x 100	82	229	P44/SH/C

Note: Shoes can also be used as side shoes.
Add one of the following suffixes to the Product Code according to its intended use:
left hand side shoe /L right hand side shoe /R.
If ears are required, add suffix /E to the Product Code.

Rainwater Heads

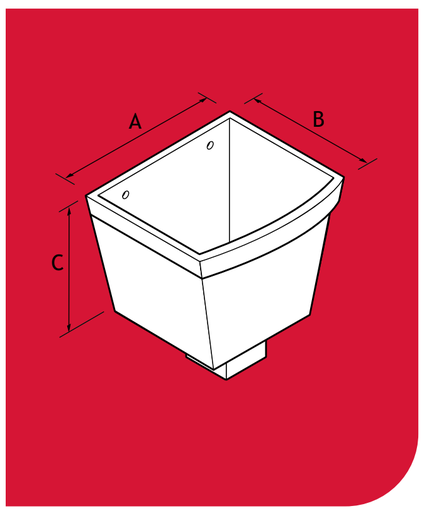

Pipe Size	Type	A	B	C	Product Code
75 x 75	Small Rectangular	254	178	178	HH/002/33
100 x 75	Small Rectangular	254	178	178	HH/002/43
100 x 100	Small Rectangular	254	178	178	HH/002/44
75 x 75	Large Rectangular	305	250	250	HH/003/33
100 x 75	Large Rectangular	305	254	302	HH/003/43
100 x 100	Large Rectangular	305	254	302	HH/003/44
125 x 100	Large Rectangular	305	254	302	HH/003/54

Square to Circular Connectors

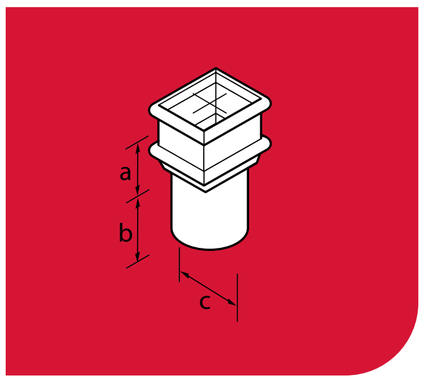

Pipe Size	A	B	C	Product Code
75 x 75	82	95	108	P33/C
100 x 75	82	95	108	P43/C
100 x 100	82	95	108	P44/C
125 x 100	82	95	108	P54/C
150 x 100	82	95	108	P64/C

Accessories

Hydrostrip Sealing System

The Hydrostrip system comprises preformed rubber sealing strips that are quick and easy to install.

Hydrostrip is supplied complete with screws, nuts and installation instructions in kits containing 20 jointing sets. Hydrostrip is not suited for use with Beaded Half Round gutters.

With Hydrostrip, joints can be made in damp conditions and can be overpainted immediately.

For half round gutters only.

The colours reproduced on this page are for general guidance only.

Silicone Sealant

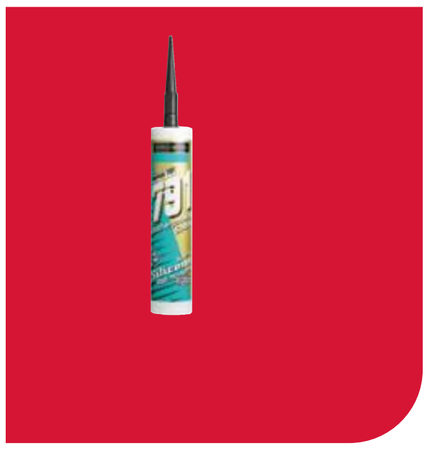

Type	Colour	Size	Product Code
Dow Corning 797	White	310ml Cartridge	SS991558
Dow Corning 797	Grey	310ml Cartridge	SS991559
Dow Corning 797	Bronze	310ml Cartridge	SS991560
Dow Corning 797	Black	310ml Cartridge	SS991561
Dow Corning 797	Limestone	310ml Cartridge	SS991562

Fixings

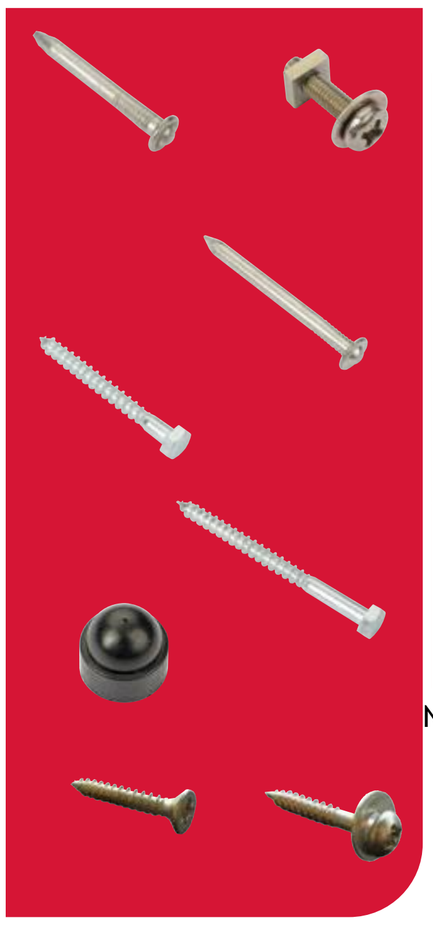

Type	Size	Notes	Product Code
Nut / Bolt / Washer	M6 x 25mm	Bright zinc plated mild steel	NBW630310
3” Pipe Nail	M8 x 75mm	Bright zinc plated mild steel	NAIL30
4” Pipe Nail	M8 x 100mm	Bright zinc plated mild steel	NAIL40
3” Coach Screw	M8 x 75mm	Hardened steel zinc plated	COACH30
4” Coach Screw	M8 x 100mm	Hardened steel zinc plated	COACH40
Coach Screw Cap	M8 dia	Black plastic	COACHCAP
Countersunk Woodscrew	No.12 x 1.5”	To fix rafter arms to GX brackets	ZNBW969041
Roundhead Woodscrew	No.12 x 1.5” with Washer	To fix Apex Heritage fascia brackets or for ‘direct fix’ gutter range	NBW630362
Roundhead Woodscrew	No.12 x 2” with Washer	To fix pipe sockets with ears or pipe clips	NBW630361

Note: Manufactured from bright zinc plated yellow passivated mild steel

Alumasc Rainwater Systems

The Cast Iron Made to Order Range

This rainwater range, featuring the Apex Heritage System Made to Order, extends the choices available with the Apex Heritage System standard range components.

Apex Heritage - Made to order

Contents

Alumasc Rainwater's Made-to-Order Cast Iron range is specifically designed to yield all of the benefits associated with the standard Apex Heritage range, satisfying all the style options for new buildings whilst addressing the challenges of exact replacement for refurbishment and restoration.

Gutters

Hoppers

Downpipes

Accessories

Design Flexibility

Alumasc's history of designing and supplying engineered rainwater systems is a sign of its ability to develop patterns for the sand casting of products that are tailored to individual buildings' specific needs.

The Apex Heritage Made-to-Order range offers the specifier a considerable choice of plain and ornamental pipes, rainwater heads and gutter profiles, including radius gutters in traditional sand cast iron.

A variety of different designs are possible for decorative earbelts and additional enrichments that can be added onto rainwater heads.

Where an existing installation has to be replaced, in particular on listed building, Alumasc can provide new castings to match the existing design. Where gutters are required to follow a particular roof radius, patterns can be engineered from dimensions or existing gutter installations to yield a gutter that can be installed to suit the roof parameters. Alumasc is happy to offer technical advice and quotations for additional designs where these might be required.

Apex Heritage - Made to Order Gutter

Contents

Half Round Gutters

Gutter Size	Type	Product Code
127 x 140	Deep, beaded, collar	SG22/6FT
152 x 70	Beaded, collar	SG25/6FT
200 x 81	Deep	SG77/6FT

SG22/6FT

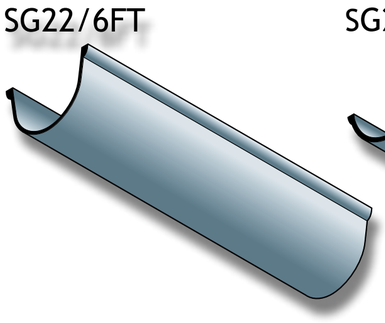

SG25/6FT

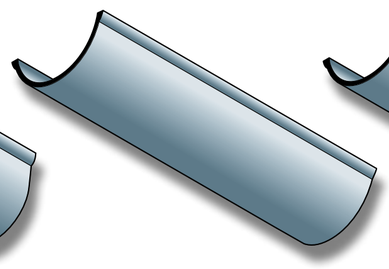

SG77/6FT

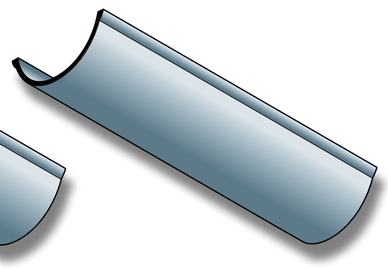

Gutters can be made to order in any shape — half round, box, ogee or moulded. Radiused gutters can also be produced. All are available with fittings to accommodate any situation: 90º external or internal angle, running outlet, union clip or LH stopend (inside gutter).

Box Gutters

Gutter Size	Type	Product Code
114 x 76	Collar	SG31/6FT
114 x 89	Right hand spigot	SG20/6FT
140 x 102	Right hand collar	SG26/6FT
140 x 102	Right hand spigot	SG08/6FT
152 x 140	Right hand spigot	SG09/6FT

SG31/6FT

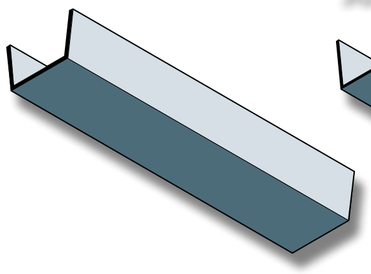

SG20/6FT

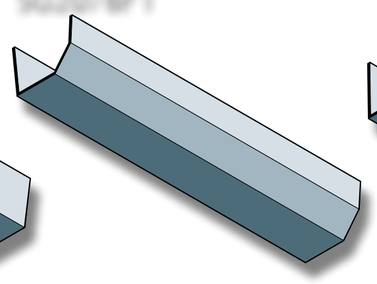

SG26/6FT

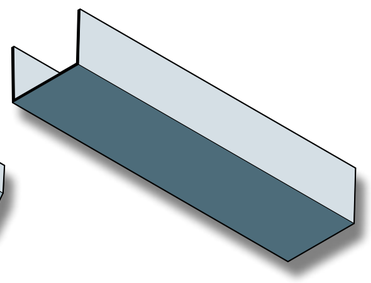

SG08/6FT

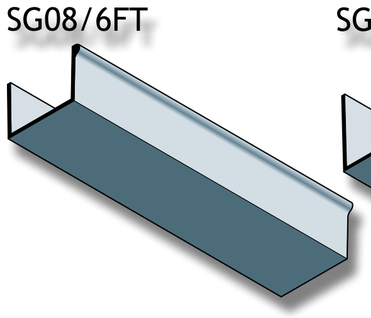

SG09/6FT

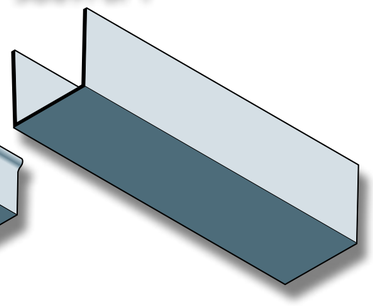

Moulded Gutters

Gutter Size	Type	Product Code
133 x 82	Right hand spigot	SG39/6FT
165 x 152	Left hand spigot	SG37/6FT
178 x 152	Right hand spigot	SG05/6FT
190 x 89	Right hand spigot	SG07/6FT
203 x 127	Right hand collar	SG10/6FT
203 x 127	Right hand spigot	SG30/6FT
203 x 152	Right hand spigot	SG12/6FT
229 x 152	Right hand spigot	SG03/6FT
260 x 146	Right hand spigot	SG14/6FT
305 x 152	Left hand spigot	SG15/6FT

SG39/6FT

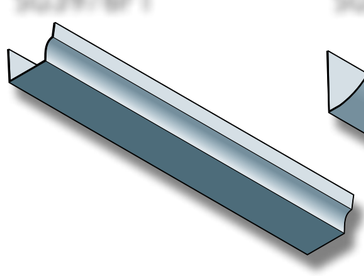

SG37/6FT

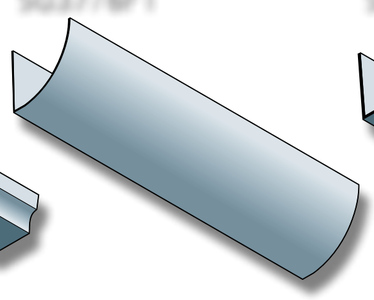

SG05/6FT

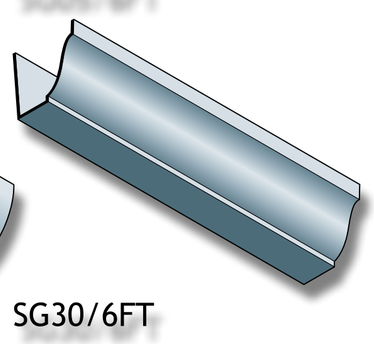

SG07/6FT

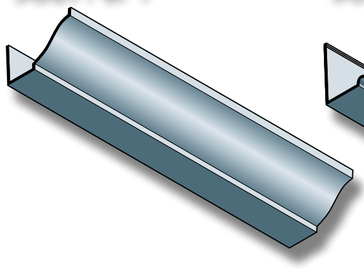

SG10/6FT

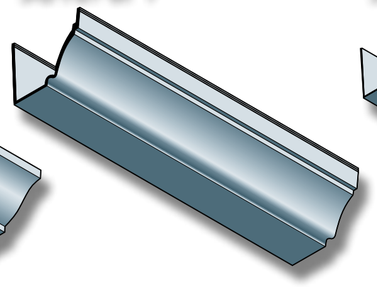

SG30/6FT

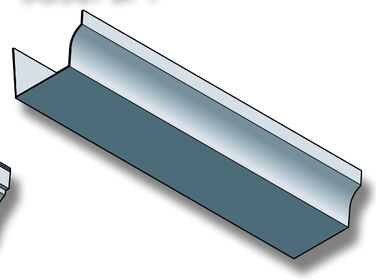

SG12/6FT

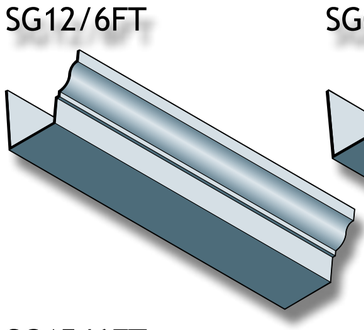

SG03/6FT

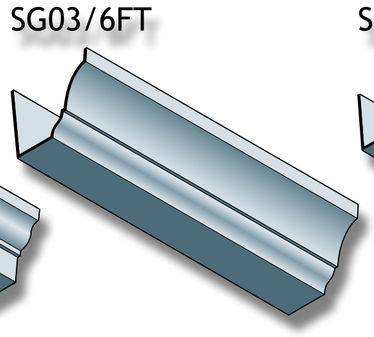

SG14/6FT

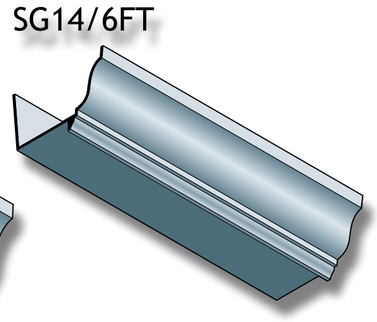

SG15/6FT

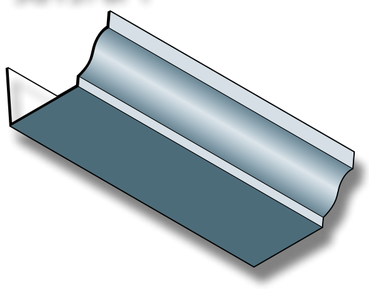

Ogee Gutters

Gutter Size	Type	Product Code
114 x 76	Right hand spigot	SG17/6FT
127 x 70	Left hand collar	SG29/6FT
127 x 76	Left hand collar	SG13/6FT
127 x 102	Right hand spigot	SG18/6FT
152 x 102	Right hand spigot	SG19/6FT

SG17/6FT

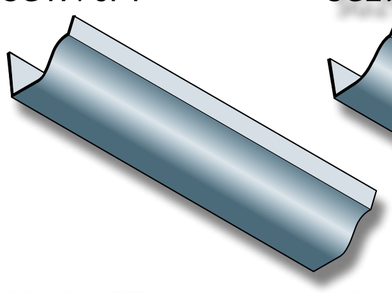

SG29/6FT

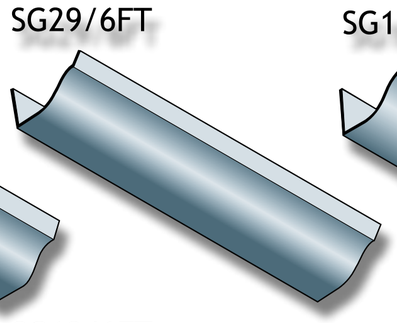

SG13/6FT

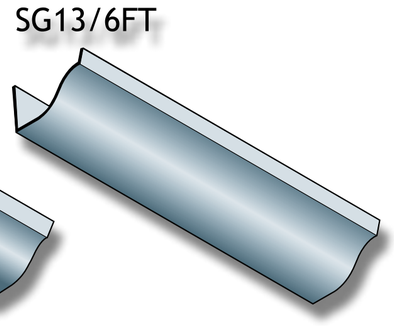

SG18/6FT

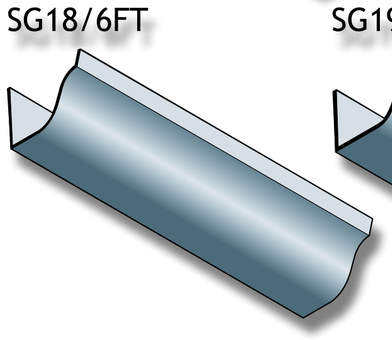

SG19/6FT

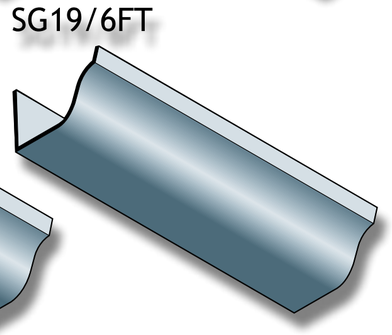

Please contact us for more information on made-to-order gutters.

Apex Heritage - Made to Order Rainwater Heads

Contents

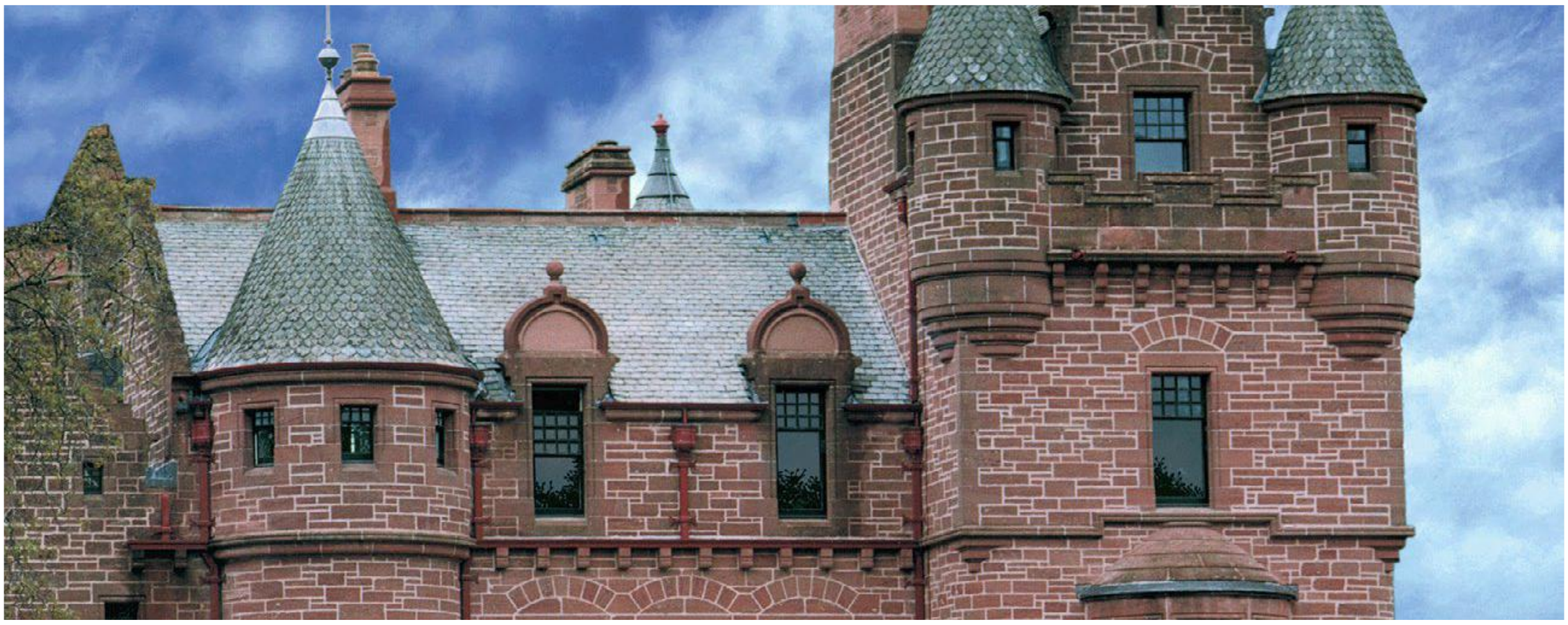

This page shows the Apex Heritage made to order range of decorative rainwater heads. These products are readily available because Alumasc holds the patterns and can produce the items to order.

Made To Order Rainwater Heads

Ref HH/011

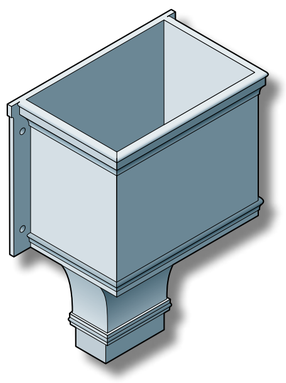

Ref HH/040

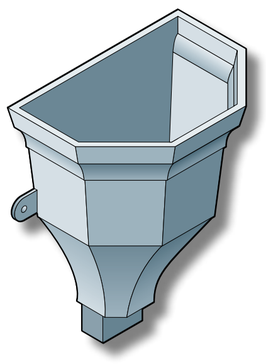

Ref HH/082

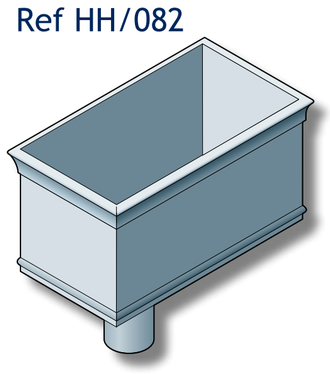

Ref HH/132

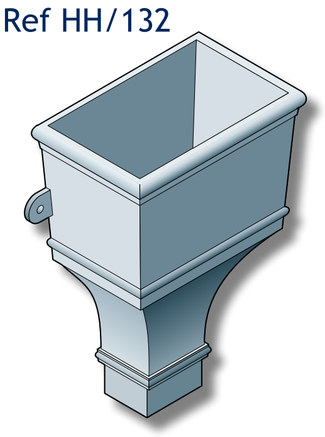

Ref HH/303

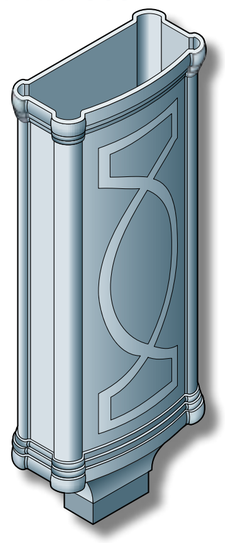

Ref HH/012

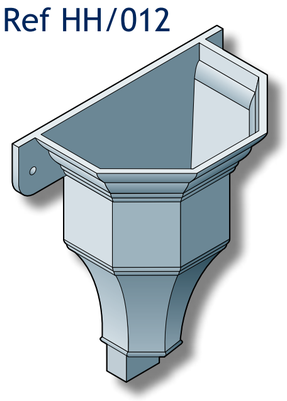

Ref HH/042

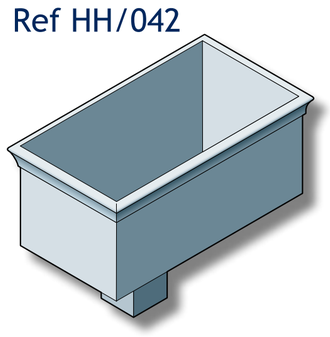

Ref HH/091

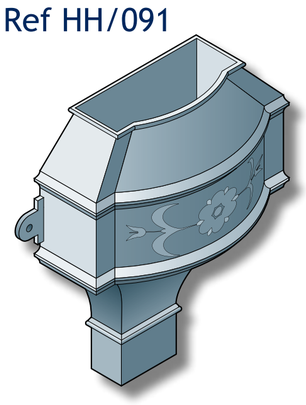

Ref HH/169

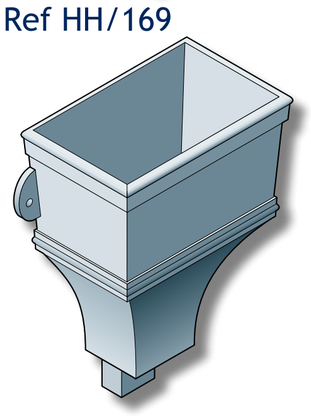

Ref HH/304

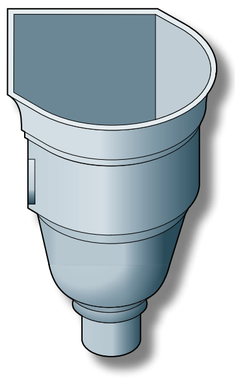

HH/017

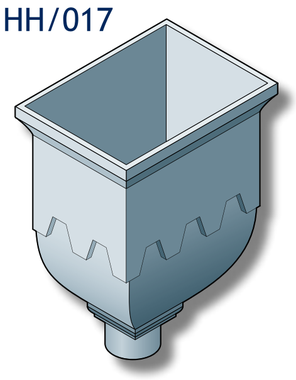

Ref HH/061

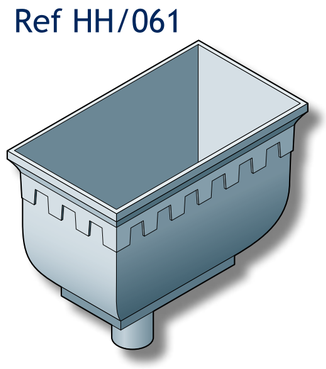

Ref HH/097

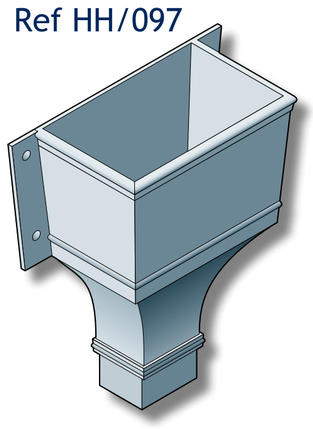

Ref HH/170

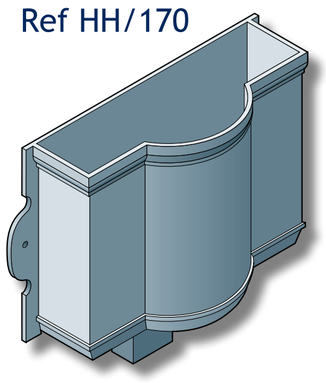

Ref HH/305 and 306

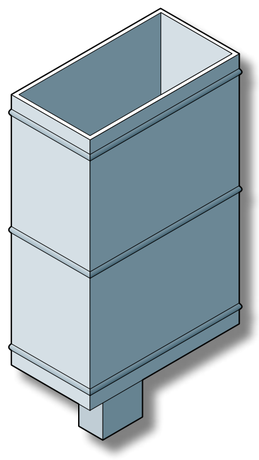

Ref HH/034

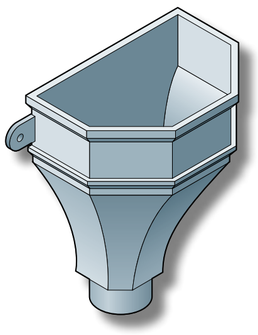

Ref HH/062

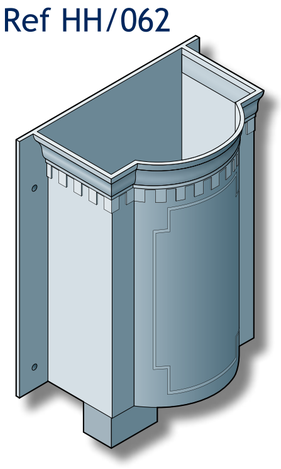

Ref HH/131

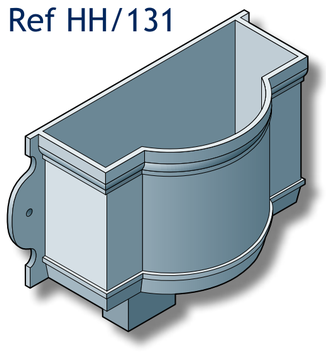

Ref HH/301

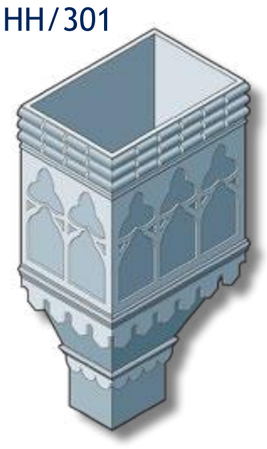

Apex Heritage - Made to Order Rainwater Heads

Contents

The number of available made-to-order designs increases as additional patterns are created for new commissions.

A variety of different designs is possible for decorative earbelts.

Additional enrichments can be incorporated into the rainwater heads shown.

Table Notes:
1 Overall width of rainwater head
2 Height of rainwater head excluding spigot

Made To Order Rainwater Heads

Circular	Square & Rectangular	Width	Height[2]	Product Code
102	127 x 102	444	368	HH/011
102	102 x 102	356	305	HH/012
76		267	260	HH/017
152	152 x 102	451	380	HH/034
102	102 x 102	2 Shapes	305	HH/040
152	152 x 102	3 Sizes	152	HH/042
102	127 x 102	457	165	HH/061
102	127 x 102	476	610	HH/062
152	152 x 102	3 Sizes	229	HH/082
76	76 x 76	356	343	HH/091
102	102 x 102	2 Shapes	292	HH/097
127	127 x 102	476	210	HH/131
127	127 x 102	381	406	HH/132
	102 x 102	298	210	HH/169
102	102 x 2	419	152	HH/170
	76 x 76	250	381	HH/301
	102 x 76	202	330	HH/303
102		368		HH/304
	102 x 76	317	451	HH/305
	102 x 76	762	451	HH/306

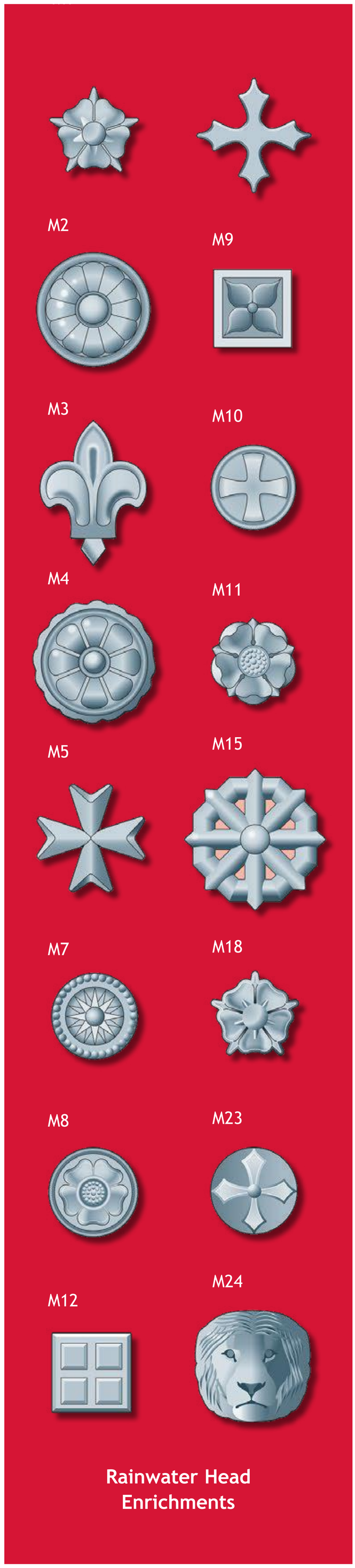

Apex Heritage - Made to Order Pipes & Holderbats

Contents

Made to Order Downpipes

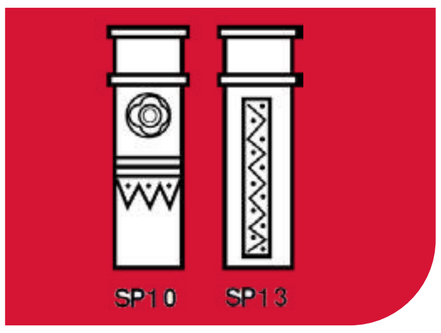

Pipe Size	A	Product Code
102 x 76	1830	SP10
102 x 76	1830	SP13

Note: All dimensions shown are in mm.

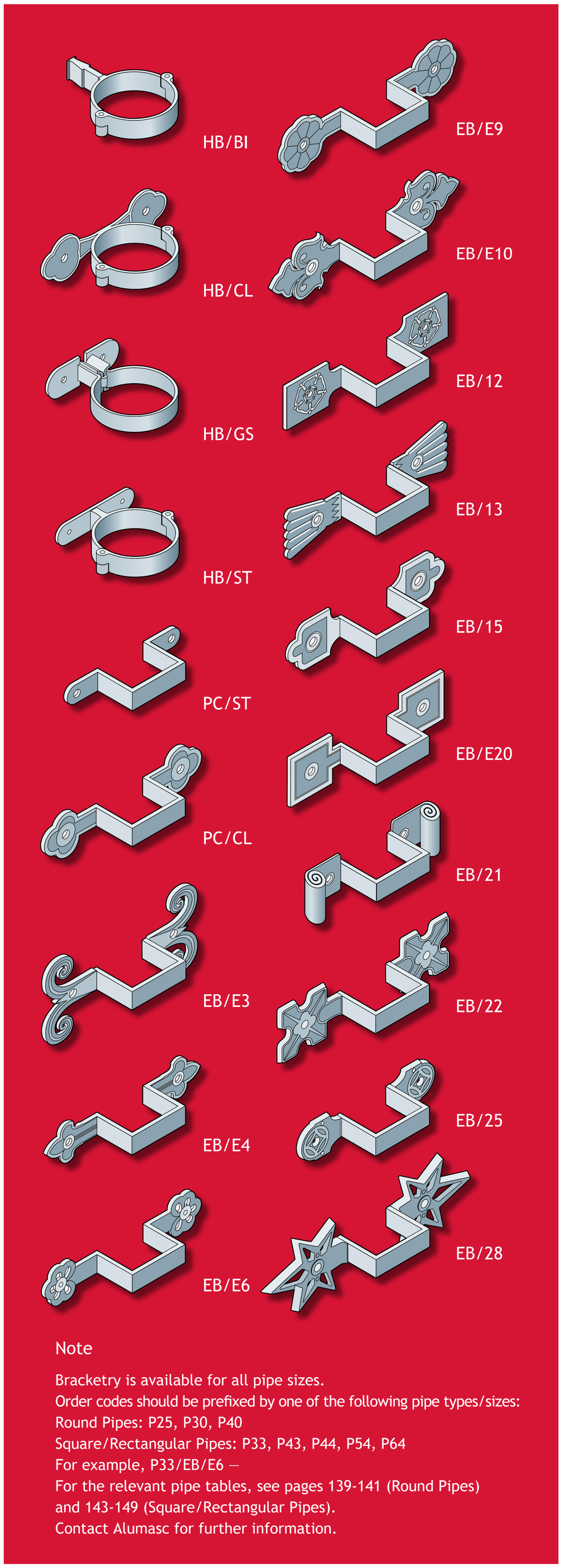

Note

Bracketry is available for all pipe sizes.
Order codes should be prefixed by one of the following pipe types/sizes:
Round Pipes: P25, P30, P40
Square/Rectangular Pipes: P33, P43, P44, P54, P64
For example, P33/EB/E6 —
For the relevant pipe tables, see pages 139-141 (Round Pipes) and 143-149 (Square/Rectangular Pipes).
Contact Alumasc for further information.

infinity®
RAINWATER SYSTEMS

Alumasc Rainwater Systems

The Infinity Range

The Infinity Steel Rainwater range provides a contemporary, eco-friendly and cost effective alternative to plastic gutters, without the risk of shrinking, leaking or colour fading. The gutter is available in a choice of four widths in the popular Half Round profile along with a connecting round downpipe system.

3 DAY DELIVERY*

15 YEARS PRODUCT WARRANTY

100% recyclable and long lasting

Steel Rainwater Systems - Product Selector

Alumasc Steel is a lightweight range of contemporary, eco-friendly and cost effective alternative to plastic gutters, without the risk of shrinking, leaking or colour fading. The gutter is available in a choice of four widths in the popular Half Round profile along with a connecting round downpipe system.

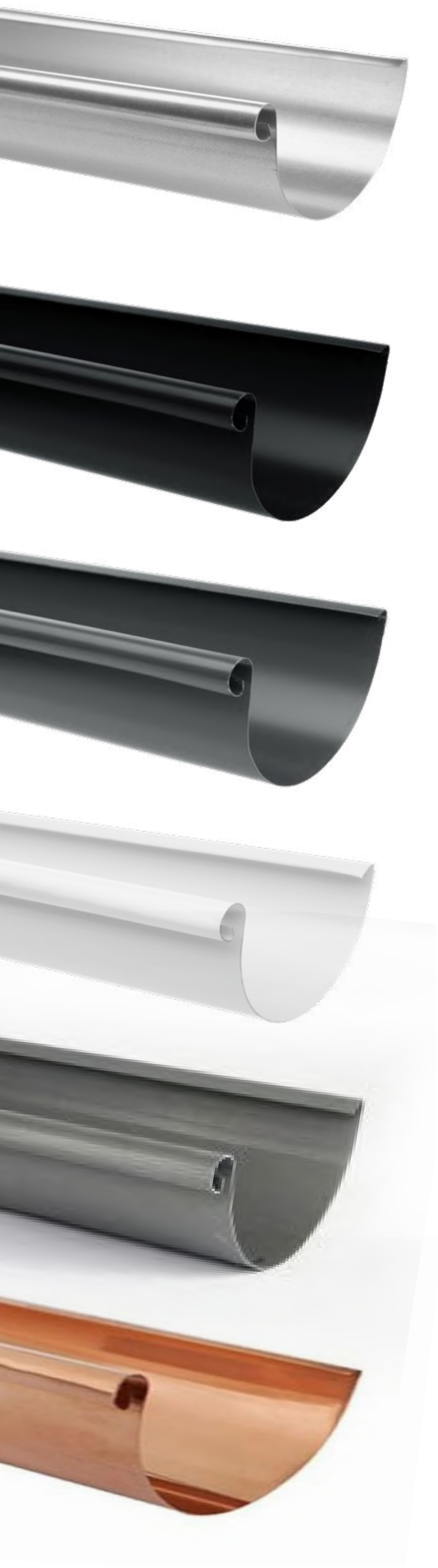

Gutters - Half round gutters available in fours sizes with a range of fixtures and fittings.

See page 187

Pipes - Circular downpipes available in two sizes to suit the gutter range, available with fittings and fixtures.

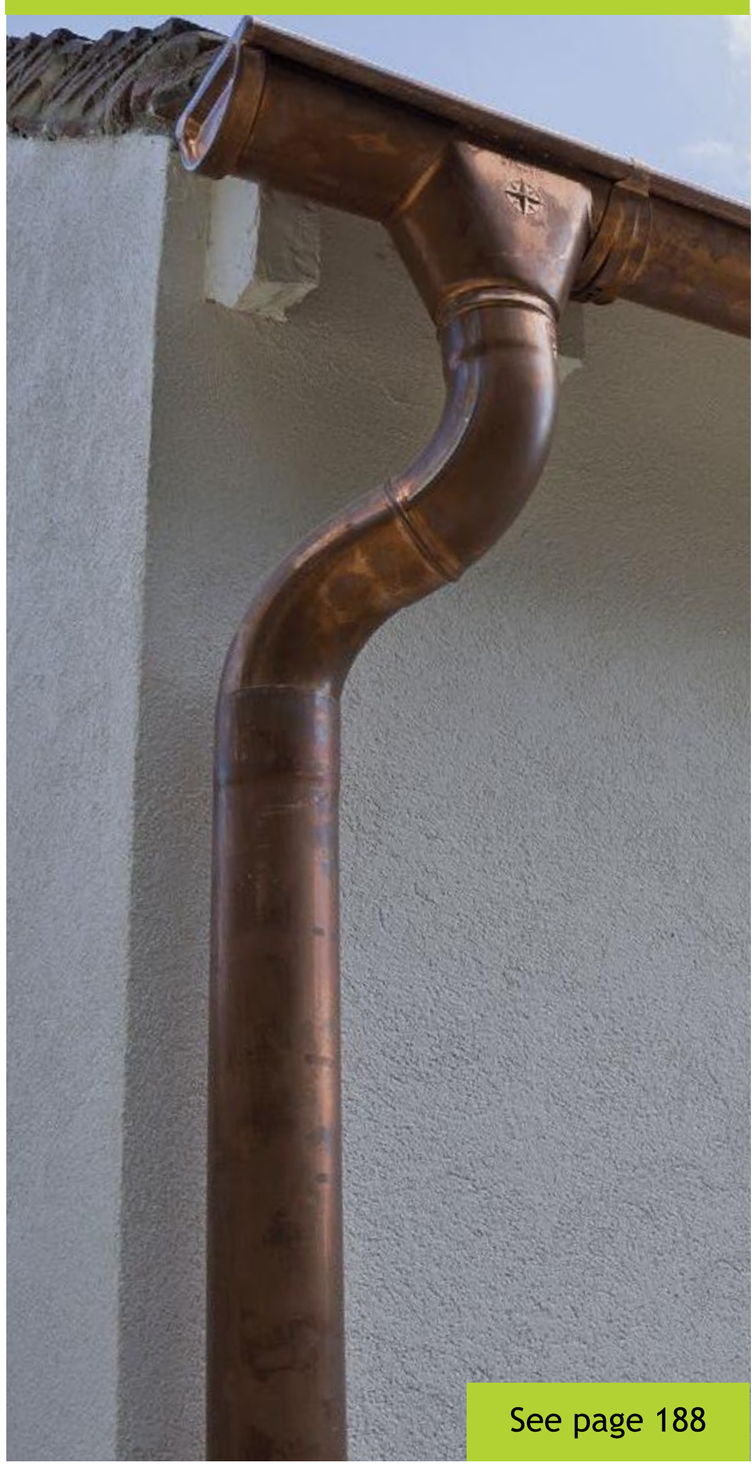

See page 188

Infinity Steel Rainwater System - Overview of finishes

The Alumasc Infinity Steel Rainwater system offers a contemporary, eco-friendly and cost effective alternative to plastic gutter systems, available in a galvanised finish or a choice of standard colours to suit both commercial and domestic projects.

Steel: Overview

The gutter is available in a choice of four widths in the popular Half Round profile along with connecting round downpipe system in two sizes together with associated fittings and accessories including Rainwater Diverters and unique steel hopper head. The Gutter system provides high flow capacity due to the larger inlet funnels on the outlets.

The coating consists of three layers of protection comprising zinc corrosion protection, primer bonding coat and a 'Robust' polyester top coat. The surface coating is UV and scratch resistant and has been formally performance tested as follows:

- Scratch resistant to ≥30 N in accordance to EN123523-12-2004
- UV resistant RUV 4 in accordance with EN10169-2

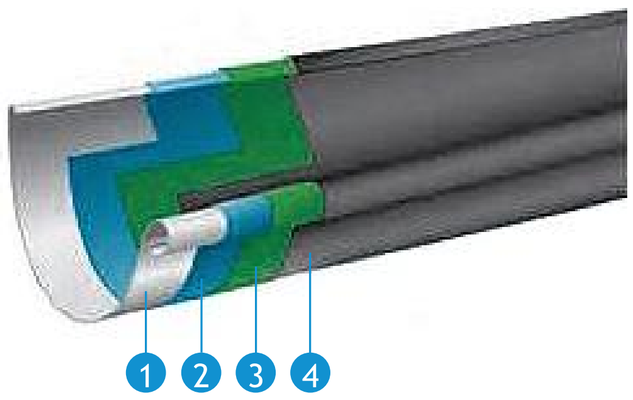

1. Galvanised steel core
2. Zinc/magnesium corrosion protection layer
3. Primer bonding coat adds further corrosion resistance
4. Polyester top coat for maximum UV and scratch resistance

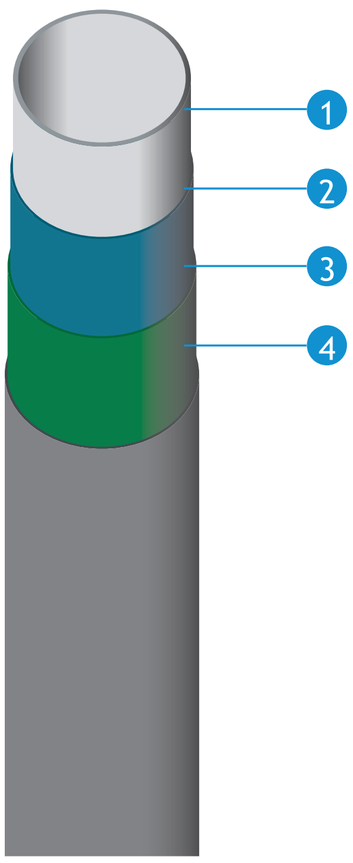

Steel: Finishes Overview

Standard Colour Finishes

Alumasc steel is available in a plain galvanised finish or in a highly durable and attractive polyester pre-coated
black, anthracite grey & white finish.

Additional Colour Finishes

Alumasc steel is also available to order in a range of 5 contemporary colours, which are galvanised and then polyester power coated. Additional colours available on request.

The colours reproduced on this page are for general guidance only.
Please contact Alumasc for further information on colour choice and samples.

Steel Colour Finishes

Quartz Zinc & Copper

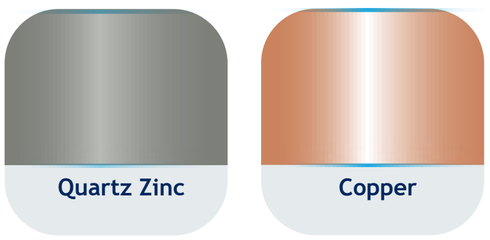

Steel Rainwater System - Product Summary

Applications

Ideal for traditional and modern buildings in both new build and refurbishment applications

A competitive alternative to uPVC systems, with increased flow rates and longevity

Features & Performance

All gutter widths are deep half round providing maximum flow rates

Higher flow capacity on outlets due to larger inlet funnels

Gutter angle is 'deep drawn' and one piece giving greater flow capacity

Lightweight, durable and non-corrodible

Quick and easy installation

Fascia bracket has a larger back plate for installation ease and 6 fixing points compared to 2 on other systems

Internally seamed downpipe gives a smooth and modern finish

Downpipe brackets have two concealed vertical fixing points

Low maintenance

Manufacture

Manufactured to ISO 9001: 2008

Manufactured to ISO 14001: 2004

Colours & Finishes

Available in steel in either a Galvanised or a Black Pre-coated Finish

Also available to order in 6 other galvanised pre-coated colour finishes upon request

The system is also available to order in plain zinc or copper

All colour coated lengths are protected with an adhesive film to prevent damage on-site

Installation & Fixing

Dry Joint system without the need for additional silicone sealants

Gutter lengths and angles are jointed with 'EPDM rubber sealed' connectors for fast and watertight installation

Downpipes and offsets are push fit with 'Swaged' ends, again for fast and watertight installation

Stop ends are push-fit with 'EPDM rubber sealed' inserts

Fascia brackets have wide back plates and are multi holed for fast and ultra-secure fascia fixing

The use of gloves when handling our steel products is highly recommended to avoid finger marks and sharp edges.

Gutter Profile & Sizes

Steel Half Round Gutter

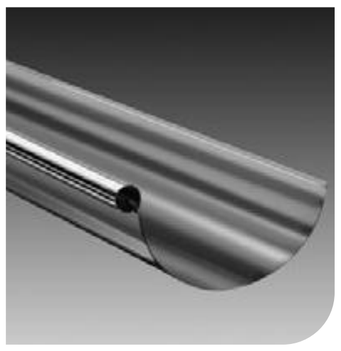

100 x 70mm HRS40
125 x 80mm HRS50
150 x 90mm HRS60

Quartz Zinc Half Round Gutter

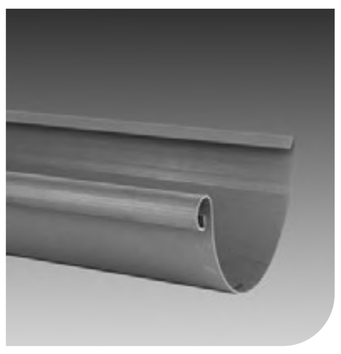

100 x 70mm HRS40
125 x 80mm HRS50

Copper Round Gutter

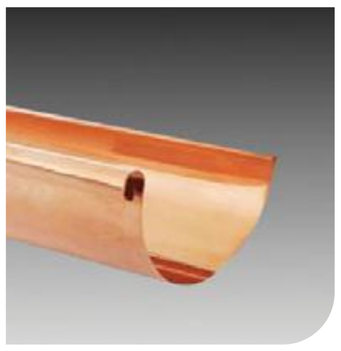

100 x 70mm HRS40
125 x 80mm HRS50
150 x 90mm HRS60

Steel Circular Downpipe

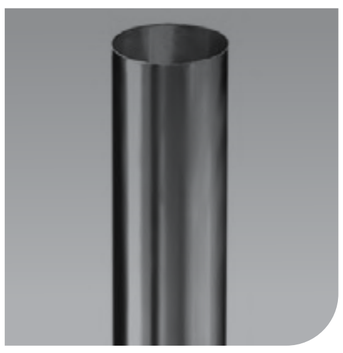

80mm (3½") SRW1
100mm (4") SRW2

Quartz Zinc Circular Downpipe

80mm (3½") SRW1

Copper Circular Downpipe

80mm (3½") SRW1
100mm (4") SRW2

Contents

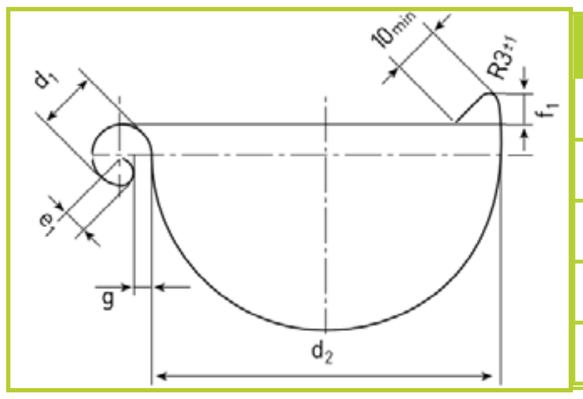

Gutter Size	HRS40	HRS50	HRS60
d_1	18	18	20
d_2	105	127	153
e_1	7	7	9
f_1	10	11	11
g	5	6	6

Gutters - 3M Length

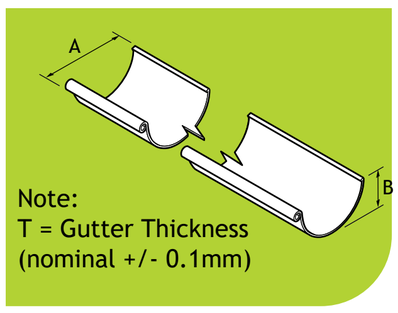

Gutter Size	A	B	T	Weight	Galvanised	Black	Anthracite Grey	RAL9007
100mm (4”)	100	75	0.6	3.24 KG	HRS40/3MA	HRS40/3MA/BLK	HRS40/3MA/GRY	HRS40/3M/9007MET
125mm (5”)	125	80	0.6	3.63 KG	HRS50/3MA	HRS50/3MA/BLK	HRS50/3MA/GRY	HRS50/3M/9007MET
150mm (6”)	150	90	0.6	4.32 KG	HRS60/3MA	HRS60/3MA/BLK	HRS60/3MA/GRY	-

Union Connector

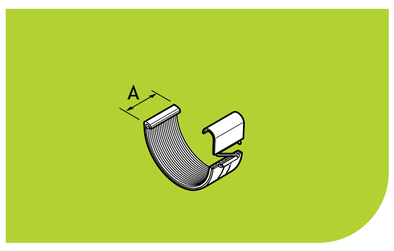

Gutter Size	A	Galvanised	Black	Anthracite Grey	RAL9007
100mm (4”)	45	HRS40/UC	HRS40/UC/BLK	HRS40/UC/GRY	HRS40/UC/9007MET
125mm (5”)	45	HRS50/UC	HRS50/UC/BLK	HRS50/UC/GRY	HRS50/UC/9007MET
150mm (6”)	45	HRS60/UC	HRS60/UC/BLK	HRS60/UC/GRY	-

Push-Fit Stop-Ends

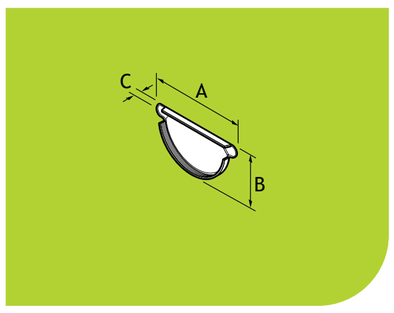

Gutter Size	A	B	C	Galvanised	Black	Anthracite Grey	RAL9007
100mm (4”)	140	75	10	HRS40/SE	HRS40/SE/BLK	HRS40/SE/GRY	HRS40/SE/9007MET
125mm (5”)	165	85	10	HRS50/SE	HRS50/SE/BLK	HRS50/SE/GRY	HRS50/SE/9007MET
150mm (6”)	190	100	10	HRS60/SE	HRS60/SE/BLK	HRS60/SE/GRY	-

Prefabricated Gutter Outlet

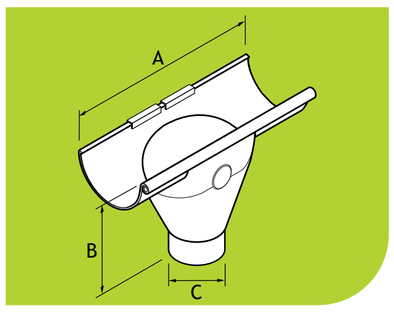

Gutter Size	Pipe Size	A	B	C	Galvanised	Black	Anthracite Grey	RAL9007
100mm (4”)	80 Dia	300	245	75	HRS40/ROA80A	HRS40/ROA80A/BLK	HRS40/ROA80A/GRY	HRS40/ROA80A/9007MET
125mm (5”)	80 Dia	300	270	75	HRS50/ROA80A	HRS50/ROA80A/BLK	HRS50/ROA80A/GRY	HRS50/ROA80A/9007MET
150mm (6”)	100 Dia	300	290	95	HRS60/ROA100A	HRS60/ROA100A/BLK	HRS60/ROA100A/GRY	-

Wrap-Around Gutter Outlet

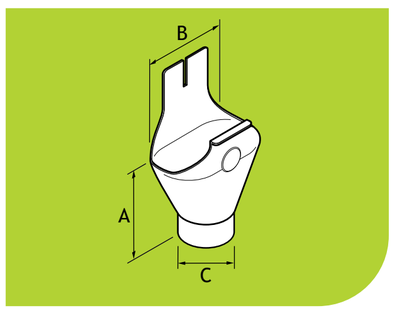

Gutter Size	Pipe Size	A	B	C	Galvanised	Black	Anthracite Grey	RAL9007
100mm (4”)	80 Dia	170	145	75	HRS40/RO80	HRS40/RO80/BLK	HRS40/RO80/GRY	HRS40/RO80/9007MET
125mm (5”)	80 Dia	190	160	75	HRS50/RO80	HRS50/RO80/BLK	HRS50/RO80/GRY	HRS50/RO80/9007MET
150mm (6”)	100 Dia	200	190	95	HRS60/RO100	HRS60/RO100/BLK	HRS60/RO100/GRY	-

90º External Angle

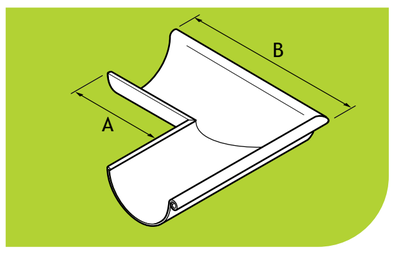

Gutter Size	A	B	Galvanised	Black	Anthracite Grey	RAL9007
100mm (4”)	160	295	HRS40/EA90A	HRS40/EA90A/BLK	HRS40/EA90A/GRY	HRS40/EA90A/9007MET
125mm (5”)	145	300	HRS50/EA90A	HRS50/EA90A/BLK	HRS50/EA90A/GRY	HRS50/EA90A/9007MET
150mm (6”)	110	295	HRS60/EA90A	HRS60/EA90A/BLK	HRS60/EA90A/GRY	-

90º Internal Angle

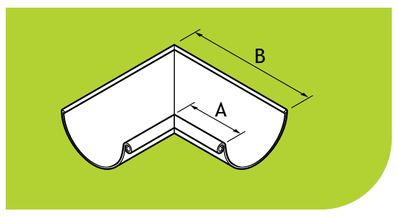

Gutter Size	A	B	Galvanised	Black	Anthracite Grey	RAL9007
100mm (4”)	160	290	HRS40/IA90A	HRS40/IA90A/BLK	HRS40/IA90A/GRY	HRS40/IA90A/9007MET
125mm (5”)	150	300	HRS50/IA90A	HRS50/IA90A/BLK	HRS50/IA90A/GRY	HRS50/IA90A/9007MET
150mm (6”)	120	300	HRS60/IA90A	HRS60/IA90A/BLK	HRS60/IA90A/GRY	-

Note: The products are available with an oxide primed coating or with a certified factory painted finish. Product codes in the tables refer to primed products. For painted products add the suffix /PA to the product code reference. All dimensions are in mm unless shown otherwise.

Steel Gutter Pipes & Fittings

Contents

Fascia Bracket

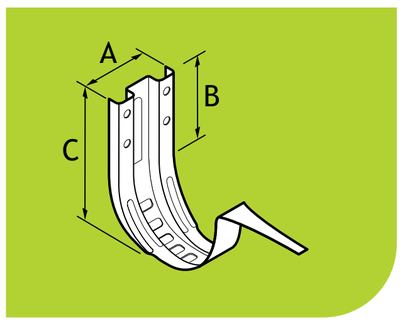

Gutter Size	A	B	C	Galvanised	Black	Anthracite Grey	RAL9007
100mm (4”)	80	70	135	HRS40/FB	HRS40/FB/BLK	HRS40/FB/GRY	HRS40/FB/9007MET
125mm (5”)	80	70	145	HRS50/FB	HRS50/FB/BLK	HRS50/FB/GRY	HRS50/FB/9007MET
150mm (6”)	80	70	160	HRS60/FB	HRS60/FB/BLK	HRS60/FB/GRY	-

Gutter Rafter Arm

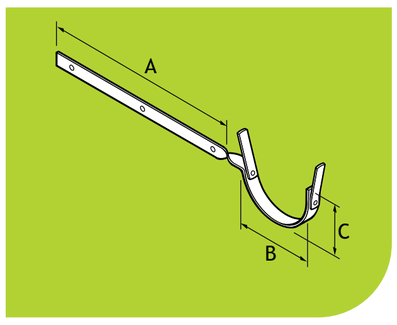

Gutter Size	A	B	C	Galvanised	Black	Anthracite Grey	RAL9007
100mm (4”)	300	130	205	HRS40/RB/SF	HRS40/RB/SF/BLK	HRS40/RB/SF/GRY	HRS40/RB/SF/9007MET
125mm (5”)	300	130	225	HRS50/RB/SF	HRS50/RB/SF/BLK	HRS50/RB/SF/GRY	HRS50/RB/SF/9007MET
150mm (6”)	300	130	240	HRS60/RB/SF	HRS60/RB/SF/BLK	HRS60/RB/SF/GRY	-

Rise & Fall Bracket

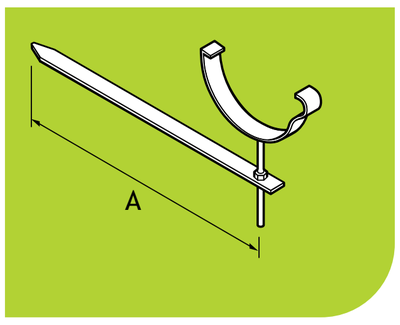

Gutter Size	A	Galvanised	Black	Anthracite Grey	RAL9007
100mm (4”)	300	HRS40/R&F	HRS40/R&F/BLK	HRS40/R&F/GRY	HRS40/R&F/9007MET
125mm (5”)	300	HRS50/R&F	HRS50/R&F/BLK	HRS50/R&F/GRY	HRS50/R&F/9007MET
150mm (6”)	300	HRS60/R&F	HRS60/R&F/BLK	HRS60/R&F/GRY	-

Pipes

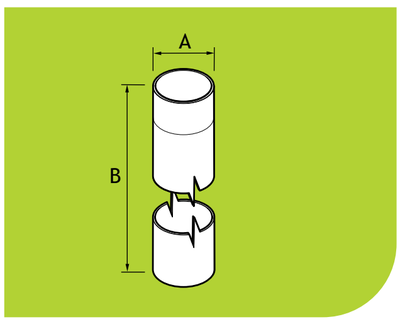

Pipe Size (A)	Pipe Length (B)	Galvanised	Black	Anthracite Grey	RAL9007
80 Dia	3000	SRW1/3M	SRW1/3M/BLK	SRW1/3M/GRY	SRW1/3M/9007MET
100 Dia	3000	SRW2/3M	SRW2/3M/BLK	SRW2/3M/GRY	SRW2/3M/9007MET

Downpipe Connector

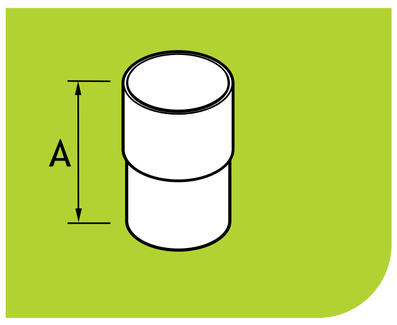

Pipe Size	A	Galvanised	Black	Anthracite Grey	RAL9007
80 Dia	118	SRW1/DC	SRW1/DC/BLK	SRW1/DC/GRY	SRW1/DC/9007MET
100 Dia	117	SRW2/DC	SRW2/DC/BLK	SRW2/DC/GRY	SRW2/DC/9007MET

Offset Bend 70°

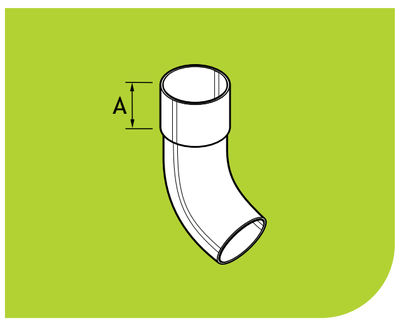

Pipe Size	A	Min Projection	Galvanised	Black	Anthracite Grey	RAL9007
80 Dia	34	182	SRW1/OSB/70	SRW1/OSB/70/BLK	SRW1/OSB/70/GRY	SRW1/OSB/70/9007MET
100 Dia	30	232	SRW2/OSB/70	SRW2/OSB/70/BLK	SRW2/OSB/70/GRY	SRW2/OSB/70/9007MET

Offset Bend 90°

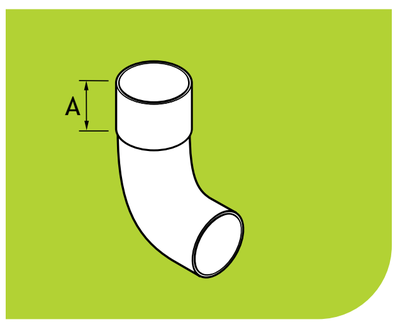

Pipe Size	A	Min Projection	Galvanised	Black	Anthracite Grey	RAL9007
80 Dia	43	230	SRW1/OSB/90	SRW1/OSB/90/BLK	SRW1/OSB/90/GRY	SRW1/OSB/90/9007MET
100 Dia	34	290	SRW2/OSB/90	SRW2/OSB/90/BLK	SRW2/OSB/90/GRY	SRW2/OSB/90/9007MET

Note: The products are available with an oxide primed coating or with a certified factory painted finish. Product codes in the tables refer to primed products. For painted products add the suffix /PA to the product code reference. All dimensions are in mm unless shown otherwise.

Contents

Branch 72º

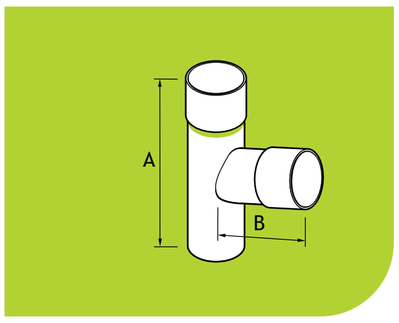

Pipe Size	A	B	Galvanised	Black	Anthracite Grey	RAL9007
80 Dia	280	72	SRW1/BR/72	SRW1/BR/72/BLK	SRW1/BR/72/GRY	SRW1/BR/72/9007MET
100 Dia	285	55	SRW2/BR/72	SRW2/BR/72/BLK	SRW2/BR/72/GRY	SRW2/BR/72/9007MET

Rainwater Diverter

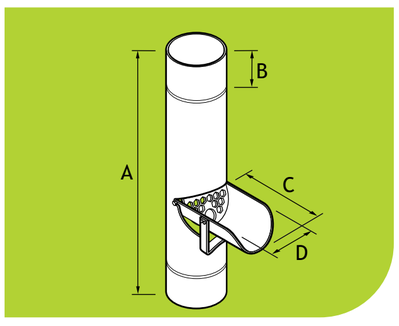

Pipe Size	A	B	C	D	Galvanised	Black	Anthracite Grey	RAL9007
80 Dia	400	57	135	78	SRW1/RDIV	SRW1/RDIV/BLK	SRW1/RDIV/GRY	SRW1/RDIV/9007MET
100 Dia	400	53	155	98	SRW2/RDIV	SRW2/RDIV/BLK	SRW2/RDIV/GRY	SRW2/RDIV/9007MET

Fixed Offset

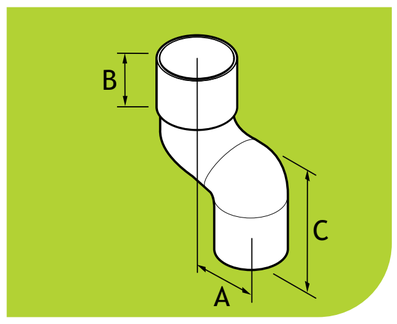

Pipe Size	A	B	C	Galvanised	Black	Anthracite Grey	RAL9007
80 Dia	64	60	160	SRW1/FOS/60	SRW1/FOS/60/BLK	SRW1/FOS/60/GRY	SRW1/FOS/60/9007MET
100 Dia	68	60	195	SRW2/FOS/60	SRW2/FOS/60/BLK	SRW2/FOS/60/GRY	SRW2/FOS/60/9007MET

Shoe

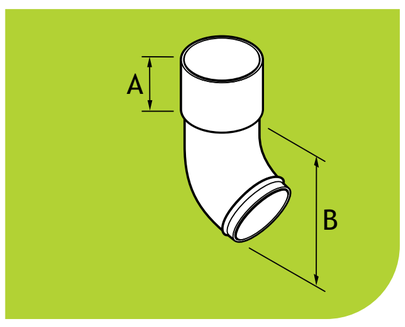

Pipe Size	A	B	Galvanised	Black	Anthracite Grey	RAL9007
80 Dia	36	127	SRW1/SH	SRW1/SH/BLK	SRW1/SH/GRY	SRW1/SH/9007MET
100 Dia	29	155	SRW2/SH	SRW2/SH/BLK	SRW2/SH/GRY	SRW2/SH/9007MET

Pipe Clip

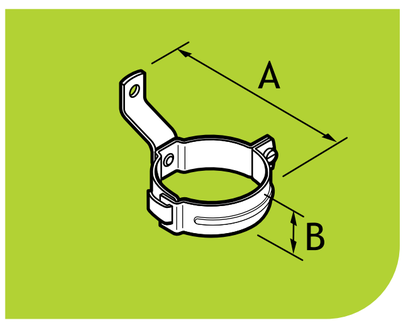

Pipe Size	A	B	Galvanised	Black	Anthracite Grey	RAL9007
80 Dia	120	25	SRW1/PC	SRW1/PC/BLK	SRW1/PC/GRY	SRW1/PC/9007MET
100 Dia	135	25	SRW2/PC	SRW2/PC/BLK	SRW2/PC/GRY	SRW2/PC/9007MET

Hopper Head

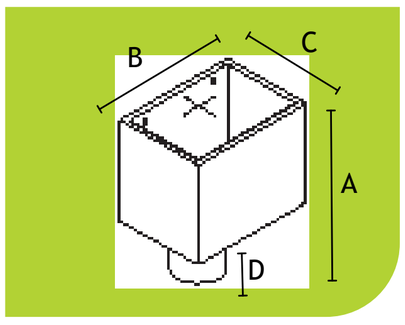

Pipe Size	A	B	C	D	Galvanised	Black	Anthracite Grey	RAL9007
80 Dia	385	220	220	80	SRW1/HH/GSR	SRW1/HH/GSR/BLK	SRW1/HH/GSR/GRY	SRW1/HH/GSR/9007MET
100 Dia	385	220	220	80	SRW2/HH/GSR	SRW2/HH/GSR/BLK	SRW2/HH/GSR/GRY	SRW2/HH/GSR/9007MET

Note: The products are available with an oxide primed coating or with a certified factory painted finish. Product codes in the tables refer to primed products. For painted products add the suffix /PA to the product code reference. All dimensions are in mm unless shown otherwise.

Copper & Quartz Zinc Gutter, Pipes & Fittings

Contents

Gutters

Note:
T = Gutter Thickness
(nominal +/- 0.1mm)

Gutter Size	Gutter Length	A	B	T	Weight (KG)	Copper	Quartz Zinc
100mm (4”)	3000mm	100	75	0.6	3.24	HRS40/3MA/COP	HRS40/3MA/QZ
125mm (5”)	3000mm	125	80	0.6	3.63	HRS50/3MA/COP	HRS50/3MA/QZ
150mm (6”)	3000mm	150	90	0.6	4.32	HRS60/3MA/COP	

Union Connector

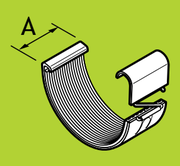

*N.B. QUARTZ ZINC COLOUR COATED GALVANISED STEEL

Gutter Size	A	Copper	Quartz Zinc
100mm (4”)	45	HRS40/UC/COP	HRS40/UC/QZ
125mm (5”)	45	HRS50/UC/COP	HRS50/UC/QZ
150mm (6”)	45	HRS60/UC/COP	

Push-Fit Stop-Ends

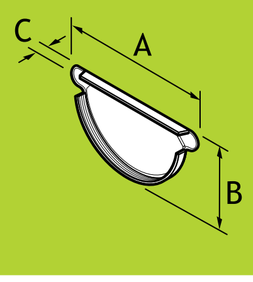

Gutter Size	A	B	C	Copper	Quartz Zinc
100mm (4”)	140	75	10	HRS40/SE/COP	HRS40/SE/QZ
125mm (5”)	165	85	10	HRS50/SE/COP	HRS50/SE/QZ
150mm (6”)	190	100	10	HRS60/SE/COP	

Fascia Brackets

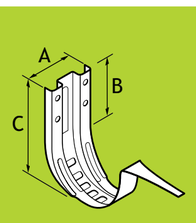

*N.B. QUARTZ ZINC COLOUR COATED GALVANISED STEEL

Gutter Size	A	B	C	Copper	Quartz Zinc
100mm (4”)	80	70	135	HRS40/FB/COP	HRS40/FB/QZ
125mm (5”)	80	70	145	HRS50/FB/COP	HRS50/FB/QZ
150mm (6”)	80	70	210	HRS60/FB/COP	

Wrap-Around Gutter Outlet

Gutter Size	Pipe Size	A	B	C	Copper	Quartz Zinc
100mm (4”)	80 Dia	170	145	75	HRS40/RO80/COP	HRS40/RO80/QZ
125mm (5”)	80 Dia	190	160	75	HRS50/RO80/COP	HRS50/RO80/QZ
150mm (6”)	100 Dia	200	190	95	HRS60/RO100/COP	

Gutter Rafter Arm

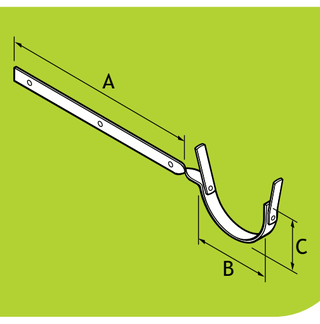

Gutter Size	A	B	C	Copper
100mm (4”)	300	130	205	HRS40/RB/SF/COP
125mm (5”)	300	130	225	HRS50/RB/SF/COP
150mm (6”)	300	130	240	HRS60/RB/SF/COP

90º External Angle

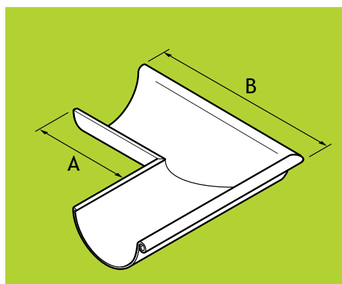

Gutter Size	A	B	Copper	Quartz Zinc
100mm (4”)	160	295	HRS40/EA90A/COP	HRS40/EA90A/QZ
125mm (5”)	145	300	HRS50/EA90A/COP	HRS50/EA90A/QZ
150mm (6”)	110	295	HRS60/EA90A/COP	

Note: The products are available with an oxide primed coating or with a certified factory painted finish. Product codes in the tables refer to primed products. For painted products add the suffix /PA to the product code reference. All dimensions are in mm unless shown otherwise.

Contents

90º Internal Angle

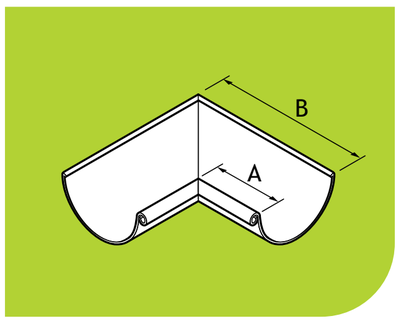

Gutter Size	A	B	Copper	Quartz Zinc
100mm (4”)	160	290	HRS40/IA90A/COP	HRS40/IA90A/QZ
125mm (5”)	150	300	HRS50/IA90A/COP	HRS50/IA90A/QZ
150mm (6”)	120	300	HRS60/IA90A/COP	

Pipes

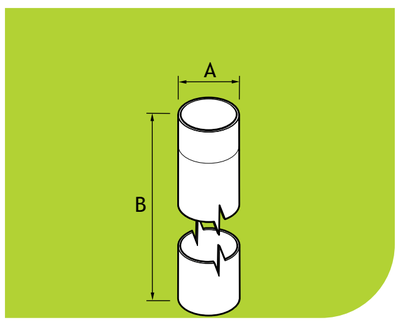

Pipe Size (A)	Pipe Length (B)	Copper	Quartz Zinc
80 Dia	3000	SRW1/3M/COP	SRW1/3M/QZ
100 Dia	3000	SRW2/3M/COP	

Pipe Clip

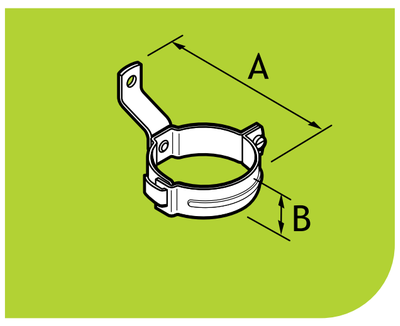

Pipe Size (A)	A	B	Copper	Quartz Zinc
80 Dia	120	25	SRW1/PC/COP	SRW1/PC/QZ
100 Dia	135	25	SRW2/PC/COP	

Two Part Offset

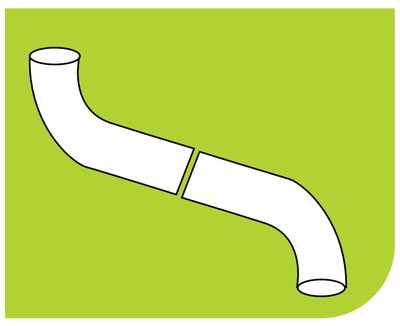

Pipe Size (A)	A	Copper	Quartz Zinc
80 Dia	34	SRW1/OSB/70/COP	SRW1/OSB/70/QZ
100 Dia	30	SRW2/OSB/70/COP	

Minimum projection of 200mm
Maximum Projection of 700mm

Offset Bend 70º

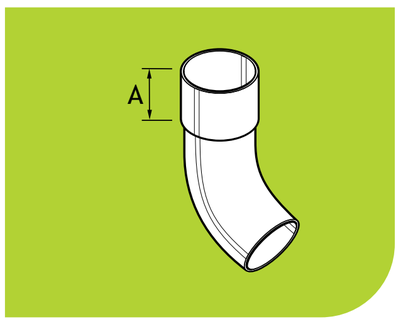

Pipe Size (A)	A	Minimum Projection	Copper	Quartz Zinc
80 Dia	34	182	SRW1/OSB/70/COP	SRW1/OSB/70/QZ
100 Dia	30	232	SRW2/OSB/70/COP	

Offset Bend 90º

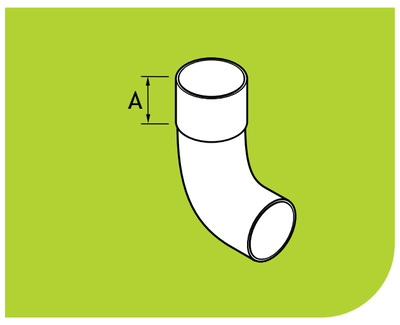

Pipe Size (A)	A	Minimum Projection	Copper	Quartz Zinc
80 Dia	43	xxx	SRW1/OSB/90/COP	SRW1/OSB/90/QZ
100 Dia	34	xxx	SRW2/OSB/90/COP	

Fixed Offset

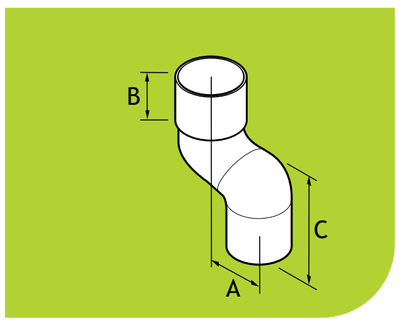

Pipe Size (A)	A	B	C	Copper	Quartz Zinc
80 Dia	64	60	160	SRW1/FOS/60/COP	SRW1/FOS/60/QZ
100 Dia	68	60	195	SRW2/FOS/60/COP	

Note: The products are available with an oxide primed coating or with a certified factory painted finish. Product codes in the tables refer to primed products. For painted products add the suffix /PA to the product code reference. All dimensions are in mm unless shown otherwise.

Contents

Branch 72°

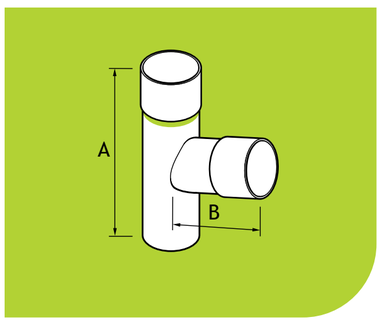

Pipe Size (A)	A	B	Copper	Quartz Zinc
80	280	72	SRW1/BR/72/COP	SRW1/BR/72/QZ
100	285	55	SRW2/BR/72COP	

Rainwater Diverter

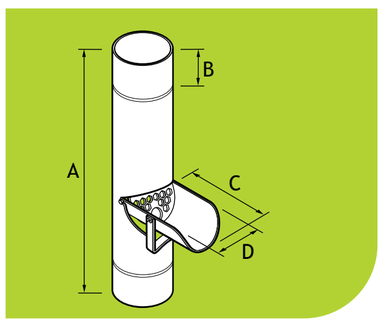

Pipe Size	A	B	C	D	Copper	Quartz Zinc
80 Dia	400	57	135	78	SRW1/RDIV/COP	SRW1/RDIV/QZ
100 Dia	400	53	155	98	SRW2/RDIV/COP	SRW2/RDIV/QZ

Shoe

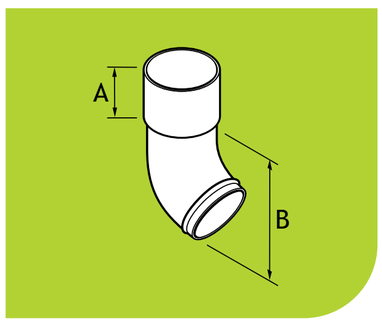

Pipe Size	A	B	Copper	Quartz Zinc
80 Dia	36	127	SRW1/SH/COP	SRW1/SH/QZ
100 Dia	29	155	SRW2/SH/COP	SRW2/SH/QZ

Downpipe Connector

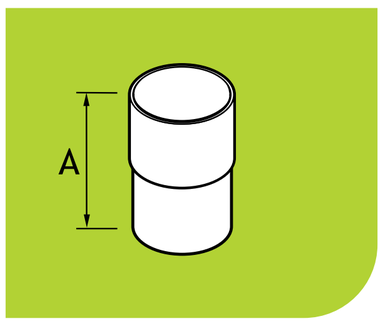

Pipe Size	A	Copper	Quartz Zinc
80 Dia	118	SRW1/DC/COP	SRW1/DC/QZ
100 Dia	117	SRW2/DC/COP	SRW2/DC/QZ

Hopper Head

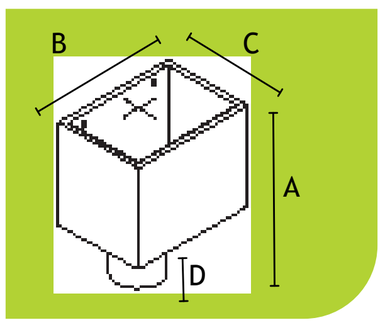

Pipe Size	A	B	C	D	Copper	Quartz Zinc
80 Dia	385	220	220	80	SRW1/HH/GSR/COP	SRW1/HH/GSR/QZ
100 Dia	385	220	220	80	SRW2/HH/GSR/COP	SRW2/HH/GSR/QZ

Note: The products are available with an oxide primed coating or with a certified factory painted finish. Product codes in the tables refer to primed products. For painted products add the suffix /PA to the product code reference. All dimensions are in mm unless shown otherwise.

Alumasc Rainwater Systems

Design & Specification

Rainwater System Design

Contents

Alumasc Technical Services is a fully experienced team of Rainwater specialists who use the latest CAD technology and calculation tools to provide an unrivalled support service to Architects, Designers and Contractors.

The Alumasc Rainwater Drainage Design Service

Alumasc Technical Services use dedicated design platform in conjunction with the requirements of BS EN 12056:2000: Gravity drainage systems inside buildings - Part 3 to calculate the most appropriate Alumasc rainwater system to suit project requirements.

The gutter flow software automatically checks the capacity of downpipes used and suggests the minimum size to which downpipes can be sized.

To use our drainage platform, visit: www.alumascwms.co.uk, Support, Drainage calculator.

Calculation Criteria

Calculation of the most efficient drainage solution takes into consideration the following criteria:

- **Catchment area**
- **Local rainfall intensity**
- **Building life and safety factor**
- **Size and flow rate of gutters**
- **Frequency and size of outlets and downpipes**

Sizing of Gutters and Downpipes

The level of rainfall a given roof drainage system should cope with is based on the position of the gutter, the potential use of the building and its projected lifespan. All true eaves gutters (external) are designed using a 1 year storm event. This is generally accepted because overflow from an external eaves gutter will fall clear of the building, which is not normally a problem. Any gutter which is classed internal, even if it is at the eaves, should be designed for an intensity based on the building life and a suitable factor of safety.

This factor will vary from 1.5 for conventional buildings to 4.5 for very important structures. For most buildings a 60 year life and safety factor of 1.5 would be the most suitable (90 year protection life).

All the parameters of flow calculations cannot be captured using a single formula. The guide below provides a basic method for calculating flow requirements. For accurate project specific specification advice on rainwater flow calculations contact Alumasc Technical Services.

Step 1

Geographical Location and Rainfall Intensity Maps

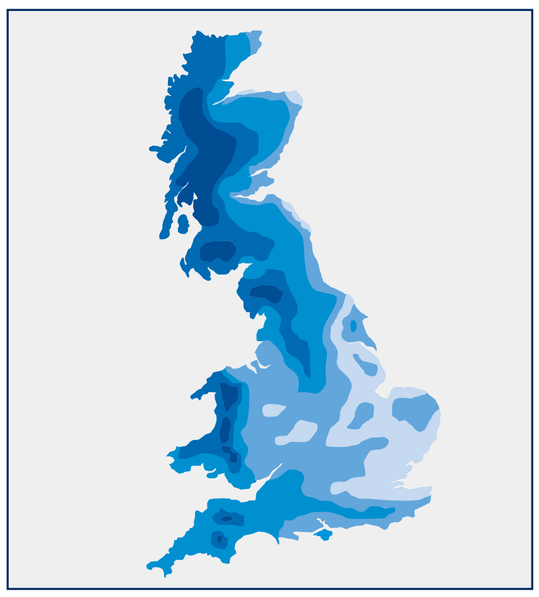

BS EN 12056-3: 2000 contains maps showing rainfall intensity in litres/second per m^2 for 1, 5, 50 and 500 year storms of 2 minute duration.

(All external gutters designed for 1 year event).

Step 2

Calculating Catchment Area

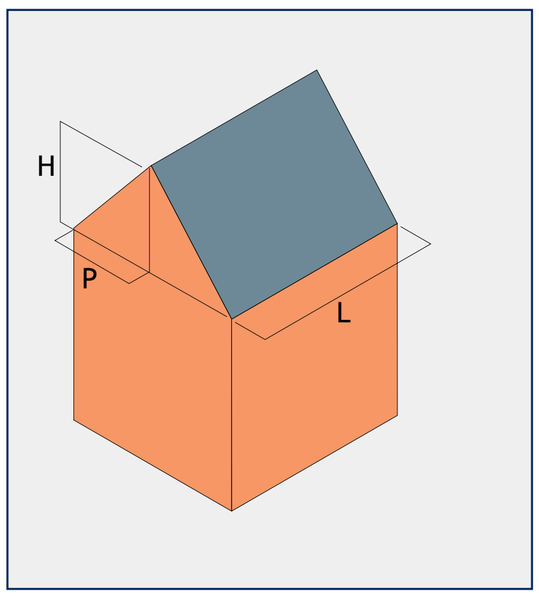

CA = (P+H/2) x L

CA = Catchment area in square metres

P = Horizontal distance between eaves and ridge

H = Height of roof

L = Length of eaves

Step 3

Frequency and Positioning of Outlets/Downpipes

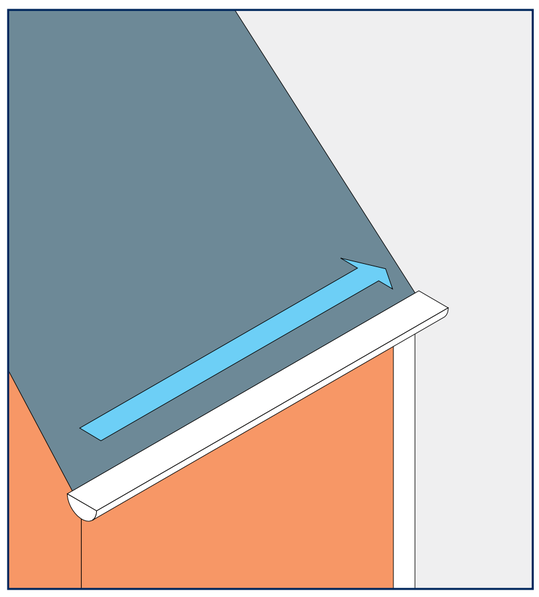

Calculate the number of outlets per run.

Step 4

Calculate Flow Requirements

Overall Rainfall

Catchment area (CA) x Rainfall intensity (RI) = Overall Rainfall (OR)

Flow Rate Per Outlet

Overall Rainfall (OR) ÷ Number of Outlets = Flow Rate Per Outlet

Choose Gutter/Outlets according to published Flow Rate capacities.

Note:

Depending on building type, a safety factor should be allowed for the sizing of internal gutters. Contact Alumasc Technical Services for further information.

Technical Support

Alumasc Water Management Solutions leading Drainage Calculator allows Architects, Specifiers and Building Engineer's to design and quantify all their Rainwater Drainage requirements using this dedicated Platform. Access our NEW Drainage Calculator from

www.alumascwms.co.uk

Drainage Calculator

Contents

Architects and Building Services Engineers can now design and quantify all their Rainwater Drainage requirements using Alumasc's dedicated free drainage calculation software.

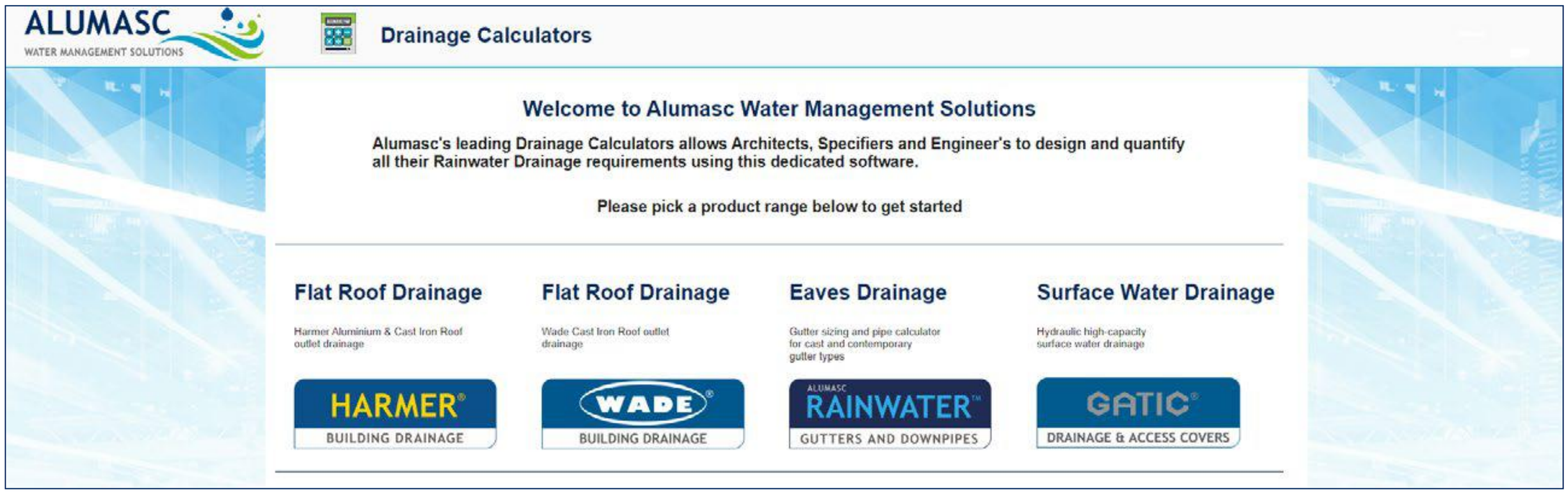

Key Features

- Category 2 and 3 Flat Roof Drainage linked to local rainfall data.
- Eaves Drainage gutter sizing and pipe calculator for cast and contemporary gutter types
- Slotdrain Hydraulic surface water drainage calculator
- New rainfall map allowing customer to define exact location for rainfall data.
- Ability to import FEH data sets for client's personal use
- Online login with ability to save progress and return at a later date, from any device & any location.
- No installation required, just an internet connection
- "Practise" feature allowing Engineers, Architects and Contractors to create their own "Practise" share & view calculations with their colleagues
- Regular updates & new features
- Links to NBS Specification, Detailed Drawings and Help pages
- Contact us gives customer the correct point of contact for the brand.
- Export to PDF & Excel Calculation Document provides a printout of the calculation and product selection.
- Regular updates & new features
- Links to NBS Specification, Detailed Drawings and Help pages
- Contact us gives customer the correct point of contact for the brand.
- Export to PDF & Excel Calculation Document provides a printout of the calculation and product selection.

Click here to visit the website or scan the QR code and register for full access.

Gutter Flow Rates

Contents

All Flow Rates quoted on this page are shown in litres per second. Gutter capacities are based on BS EN 12056-3:2000, assuming a maximum distance of 50 x gutter depth, from high point to outlet. Longer gutters or gutters with corners exceeding 10º will have a reduced capacity. For further information contact Alumasc Technical Services.

Cast Aluminium

Gutter Range	Profile	Size (mm)	Pipe Outlet Diameter (mm)			Pipe Outlet Size (mm)		
			63	75	100	75 x 75	100 x 75	100 x 100
Heritage	Half Round	100	1.14	1.24		1.24	1.24	
		113	1.14	1.62		1.62	1.62	
		125	1.24	2.08		2.08	2.08	
	Beaded Half Round	113	1.62	1.62		1.62	1.62	
		125	1.77	1.90		2.08	2.08	
	Beaded Deep Run	113 x 75	1.77	1.90		2.10	3.06	
	Victorian Ogee	100	1.32	1.32		1.32	1.32	
		113	1.35	1.82		1.82	1.82	
		125	1.35	2.12		2.10	2.34	
	Moulded	100 x 75	1.40	1.64		2.10	2.44	
		125 x 100	1.52	1.97	3.81	2.10	4.62	4.62
		150 x 100	2.42	2.84	3.81	2.10	4.65	5.12
		200 x 150	0.99	1.71	3.81	2.10	3.63	5.41

Contemporary Aluminium

Gutter Range	Profile	Size (mm)	Pipe Outlet Diameter (mm)			Pipe Outlet Size (mm)		
			63	75	100	75 x 75	100 x 75	100 x 100
Aqualine	Half Round	100 x 50	0.99	1.12		1.12	1.12	
		120 x 60	0.99	1.71		1.86	1.86	
		150 x 75	0.99	1.71	3.44	2.10	3.44	3.44
	Deep Run	110 x 85	0.99	1.71	2.88	2.10	2.88	2.88
	Modern	100 x 85	0.99	1.71		2.10	2.38	
		150 x 120	0.99	1.71	3.81	2.10	3.63	5.41
	Moulded	140 x 100	0.99	1.71		2.10	3.52	
		160 x 100	0.99	1.71	3.81	2.10	3.63	4.38
	Box	120 x 80	1.39	2.08	2.72	2.38	3.32	3.72
		140 x 100	1.55	2.32	4.21	2.66	4.02	5.32
		160 x 100	1.55	2.33	4.26	2.67	4.04	5.39
GX	Joggle	100 x 75	1.32	1.95		2.28		
		125 x 100	1.52	2.31	4.14	2.64	3.99	5.23
		150 x 100	1.52	2.31	4.14	2.64	3.99	5.23
		150 x 150	1.89	2.83	5.16	3.24	4.89	6.59
		200 x 150	1.89	2.83	5.16	3.24	4.89	6.59
	Smooth	120 x 75	1.32	1.93		2.27	2.87	
		140 x 100	1.52	2.28	3.99	2.61	3.95	5.04
		170 x 125	1.73	2.59	4.73	2.97	4.48	6.04
		175 x 150	1.90	2.84	5.20	3.26	4.92	6.63
		225 x 150	1.88	2.82	5.15	3.23	4.88	6.57
	Moulded	113 x 75	0.99	1.71		2.10		
		140 x 100	0.99	1.71	3.81	2.10	3.63	5.41
		160 x 100	0.99	1.71	3.81	2.10	3.63	5.41
		175 x 150	0.99	1.71	3.81	2.10	3.63	5.41
		200 x 150	0.99	1.71	3.81	2.10	3.63	5.41

Rainwater Pipe Flow Rates

Note: The capacity of a rainwater system is usually dependent upon the capacity of the gutter outlet or flat roof outlet rather than the rainwater pipe. Please refer to BS EN 12056-3:2000, Section 6, Table 8 for capacities of vertical rainwater pipes.

Gutter Flow Rates Cont.

Contents

All Flow Rates quoted on this page are shown in litres per second. Gutter capacities are based on BS EN 12056-3:2000, assuming a maximum distance of 50 x gutter depth, from high point to outlet. Longer gutters or gutters with corners exceeding 10º will have a reduced capacity. For further information contact Alumasc Technical Services.

Cast Iron

Gutter Range	Profile	Size (mm)	Pipe Outlet Diameter (mm)			Pipe Outlet Size (mm)		
			63	75	100	75 x 75	100 x 75	100 x 100
Apex Heritage	Half Round	100	1.19	1.22				
		113	1.19	1.62				
		125	1.19	1.62	2.06			
		152	1.19	1.64	3.14			
	Beaded Half Round	113	1.19	1.62				
		125	1.19	1.97	2.06			
	Victorian Ogee	113	1.24	1.80				
		125	1.24	1.97	2.32			
	Moulded	100 x 75	1.09	1.64		2.24	2.24	
		125 x 100	1.09	1.64	3.21	2.17	3.17	
		150 x 100	1.09	1.64	3.21	2.17	3.17	4.43

Alumasc Water Management Solutions								
Aluminium Downpipes			Cast Iron Downpipes			Steel Downpipes		
Nominal Size	Internal Diameter	Flow Rate	Nominal Size	Internal Diameter	Flow Rate	Nominal Size	Internal Diameter	Flow Rate
63mm	60.5mm	2.8 l/s	63mm	57mm	2.39 l/s	80mm	79mm	5.7 l/s
75mm	74mm	4.8 l/s	75mm	70mm	4.14 l/s	100mm	99mm	10.43 l/s
75x75mm	68x68mm	5.28 l/s	75x75mm	69x69mm	5.49 l/s			
100x75mm	98x72mm	9.28 l/s	100x75mm	95x69mm	8.42 l/s			
100mm	98.5mm	10.29 l/s	100mm	95mm	9.34 l/s			
100x100mm	97x97mm	13.63 l/s	100x100mm	95x95mm	12.89 l/s			
150mm	147mm	29.93 l/s	125x100mm	121x95mm	17.8 l/s			
			150x100mm	146x95mm	17.8 l/s			
All external rainwater downpipe flowrates calculated in accordance with BS EN 12056-3:2000								

Rainwater Pipe Flow Rates

The capacity of a rainwater system is usually dependent upon the capacity of the gutter outlet or flat roof outlet rather than the rainwater pipe. Please refer to BS EN 12056-3:2000, Section 6, Table 8 for capacities of vertical rainwater pipes.

Contents

Specification

In collaboration with NBS Source, Alumasc products are listed on the NBS library to allow architects and specifiers quick and easy access to the correct product specification and respective clauses. The below table lists applicable clauses for each of the Skyline product; some products fall into one or more category and will vary by application.

Typical clauses are listed below; for specific advice and guidance on specification clauses, please contact the Skyline technical team on 01536 383810.

		Uniclass		CAWS	
Product Range	Classification	Uniclass Code	Title	CAWS Code	Title
Aluminium Gutters	Primary	Pr_65_50_35_06	Aluminium Eaves Gutters	R10/11	Aluminium gutters
	Additional			R10/311	Aluminium gutters
Aluminium Downpipes	Primary	Pr_65_52_03_04	Aluminium Rainwater Pipes and Fittings	R10/30	Aluminium pipework
	Additional			R10/370	Aluminium pipework
Cast Iron Gutters	Primary	Pr_65_50_35_11	Cast Iron Eaves Gutters	R10/12	Cast Iron gutters
	Additional			R10/315	Cast Iron gutters
Cast Iron Downpipes	Primary	Pr_65_52_03_11	Cast Iron Rainwater Pipes and Fittings	R10/380	Cast iron pipework - spigot and socket
	Additional				
Steel Gutters	Primary	Pr_65_50_35_29	Galvanised Steel Combined Fascias Soffits and Gutters	R10/311	Steel gutters
	Additional				
Steel Downpipes	Primary	Pr_65_50_35_29	Galvanised Steel Combined Fascias Soffits and Gutters	R10/370	Steel pipework
	Additional				

Aluminium Example

Manufacturer: Alumasc Water Management Solutions, Station Road, Burton Latimer, Kettering, Northants NN15 5JP 01536 383810. Email: info@alumascwms.co.uk

Product reference: Use product name and product code e.g. Heritage Cast Aluminium Rainwater System

Material/grade: Made from LM2 and LM6 grades of Aluminium alloy to BSEN1559:1997, BSEN 1676:1997 and BSEN 1706:1998

Extruded from 6063 T6 alloy to to BS1474:1972 Made from Aluminium sheet to BSEN515:1993

Size/Profile: Standard sizes and profiles

Finish/Colour: Polyester powder coated to BS EN 12206-1:2004 as per Architects requirements. Coating to have BBA certificate

Accessories: Corners, Angles, Closer pieces, as required to Architects design

Other requirements: Main structure and support carrier and fixation by others, contractor to site cut/trim as required and level and line through.

Method of jointing: Refer to individual range installation guide

Method of support/fixing: Refer to individual range installation guide

Cast Iron Example

Manufacturer: Alumasc Water Management Solutions, Station Road, Burton Latimer, Kettering, Northants NN15 5JP 01536 383810. Email: info@alumascwms.co.uk

Product reference: Use product name and product code e.g. Apex Heritage Cast Iron Rainwater System

Material/grade: Complies with BS 460:2002 Cast Iron Rainwater Goods

Size/Profile: Standard sizes and profiles

Finish/Colour: Apex certified painted finish

Accessories: Corners, Angles, Closer pieces, as required to Architects design

Other requirements: Main structure and support carrier and fixation by others, contractor to site cut/trim as required and level and line through.

Method of jointing: Refer to individual range installation guide

Method of support/fixing: Refer to individual range installation guide

Steel Example

Manufacturer

Alumasc Water Management Solutions, Station Road, Burton Latimer, Kettering, Northants NN15 5JP 01536 383810. Email: info@alumascwms.co.uk

Product reference: Use product name and product code e.g. Infinity Steel Rainwater System

Material/grade: Made from Mild Steel

Size/Profile: Standard sizes and profiles

Finish/Colour: Galvanised or polyester powder coated to BS EN 12206-1:2004

Accessories: Corners, Angles, Closer pieces, as required to Architects design

Other requirements: Main structure and support carrier and fixation by others, contractor to site cut/trim as required and level and line through.

Method of jointing: Refer to individual range installation guide

Method of support/fixing: Refer to individual range installation guide

Contents

General specification clauses for Alumasc rainwater systems are provided below. For project specific specification advice, contact Alumasc Technical Services.

EXECUTION CLAUSES

600 PREPARATION, ENSURE:

- Below ground drainage is ready to receive rainwater or that the discharge can be dispersed by approved means to prevent damage or disfigurement of the building fabric.
- Any specified painting of surfaces which will be concealed or inaccessible is completed.

605 INSTALLATION GENERALLY:

- Install pipework/gutters to ensure the complete discharge of rainwater from the building without leaking.
- Obtain all components for each type of pipework/guttering from the same manufacturer unless specified otherwise.
- Provide access fittings and rodding eyes as necessary in convenient locations to permit adequate cleaning and testing of pipework.
- Avoid contact between dissimilar metals and other materials which would result in electrolytic corrosion.
- Do not bend plastics or galvanized steel pipes.
- Adequately protect pipework/gutters from damage and distortion during construction. Fit purpose made temporary caps to prevent ingress of debris. Fit all access covers, cleaning eyes and blanking plates as the work proceeds.
- Where not specified otherwise use plated, sherardized, galvanized or nonferrous fastenings, suitable for the purpose and background, and compatible with the material being fixed.

610 FIXING AND JOINTING GUTTERS:

- Fix securely at specified centres and at all joints in gutters, with additional brackets near angles and outlets.
- Provide for thermal and building movement when fixing and jointing, and ensure that clearances are not reduced as fixing proceeds.
- Seal as specified to make watertight.
- Spread jointing compound evenly over jointing face of socket.
- For gutters with bolted joints, tighten joints in the gutter sole before any other bolts. Fit suitable washers, and spacers to prevent overtightening, unless specified otherwise.
- Tighten fixing to squeeze out some compound.
- Remove surplus, squeezed out compound and neatly clean off.
- Ensure that roofing underlay is dressed into gutter.

615 SETTING OUT EAVES GUTTERS – TO FALLS

- Set out to a true line and even gradient to ensure no ponding or backfall. Position high points of gutters as close as practical to the roof and low points not more than 50 mm below the roof.
- Position outlets to align with connections to below ground drainage, unless shown otherwise on drawings.

630 RAINWATER OUTLETS, ENSURE THAT:

- Outlets are securely fixed before connecting pipework.
- Junctions between outlets and pipework can accommodate all movement in the structure and pipework.

435 FIXING PIPEWORK:

- Fix securely at specified centres plumb and/or true to line.
- Make changes in direction of pipe runs only where shown on drawings unless otherwise approved.
- Fix branches and low gradient sections with uniform and adequate falls to drain efficiently.
- Fix externally socketed pipes/fittings with sockets facing upstream.
- Provide additional supports as necessary to support junctions and changes in direction.
- Fix every length of pipe at or close below the socket collar or coupling.
- Provide a load bearing support for vertical pipes at not less than every storey level. Tighten fixings as the work proceeds so that every storey is self supporting and undue weight is not imposed on fixings at the base of the pipe.
- Isolate from structure where passing through walls or floors and sleeve pipes as specified in Section P31.
- Provide for thermal and building movement when fixing and jointing, and ensure that clearances are not reduced as fixing proceeds.
- Fix expansion joint pipe sockets rigidly to the building and elsewhere use fixings that allow the pipe to slide.

650 JOINTING PIPEWORK/GUTTERS:

- Joint using materials, fittings and techniques which will make effective and durable connections.
- Joint differing pipework/gutter systems with adaptors recommended by manufacturer(s).
- Cut ends of pipes to be clean and square with burrs and swarf removed. Chamfer pipe ends before inserting into ring seal sockets.
- Ensure that jointing or mating surfaces are clean, and where necessary lubricated, immediately before assembly.
- Form junctions using fittings intended for the purpose ensuring that jointing material does not project into bore of pipes, fittings and appliances.
- Remove surplus flux/solvent/cement/sealant from joints.

675 COATED PIPEWORK/GUTTERS:

- Make good to coatings after cutting and any other damage or recoat, as recommended by the manufacturer.

685 IDENTIFICATION OF INTERNAL RAINWATER PIPEWORK:

- To BS 1710 using self-adhesive bands or identification clips located at junctions, at both sides of each slab, bulkhead and wall penetration, and elsewhere as directed.

690 ELECTRICAL CONTINUITY:

- Use clips or suitable standard couplings supplied for the purpose by pipework manufacturer to ensure electrical continuity at all joints in metal pipes with flexible couplings and which are to be earth bonded.

700 ACCESS FOR TESTING AND MAINTENANCE:

- Install pipework and gutters with adequate clearance to permit testing, cleaning and maintenance.
- Position access fittings and rodding eyes so that they are not obstructed by other pipework, framing, etc.

COMPLETION CLAUSES

900 TESTING GENERALLY:

- Inform the Contractor Administrator sufficiently in advance to give him a reasonable opportunity to observe tests.
- Check that all sections of installation are free from obstruction and debris before testing.
- Provide clean water, assistance and apparatus for testing as required.
- Carry out tests as specified. After testing, locate and remedy all defects without delay and retest as instructed.
- Keep a record of all tests and provide a copy of each to the Contractor Administrator.

905 INTERNAL PIPEWORK TEST – ENGLAND, WALES AND NORTHERN IRELAND:

- Temporarily seal open ends of pipework with plugs.
- Connect a 'U' tube water gauge and air pump to the pipework via a plug.
- Pump air into pipework until gauge registers 38 mm.
- Allow a period for temperature stabilization, after which the pressure of 38 mm is to be maintained without loss for not less than 3 minutes.

906 INTERNAL PIPEWORK TEST- SCOTLAND

- Standard – To BSEN12056-3:2000, National Annex NG

910 GUTTER TEST:

- Block all outlets, fill gutters to overflow level and after 5 minutes closely inspect for leakage.

915 MAINTENANCE INSTRUCTIONS

- At completion, submit printed instructions recommending procedures for maintenance of the rainwater installation including full details of the recommended inspection, cleaning and repair procedures.

920 IMMEDIATELY BEFORE HANDOVER:

- Remove construction rubbish and debris from all roofs and gutters. Where possible, sweep and remove fine dust which may enter rainwater systems. Do not sweep or flush dust or debris into the rainwater system.
- Remove swarf, debris and temporary caps from the entire rainwater installation.
- Ensure that all access covers, rodding eyes, outlet gratings, etc. are secured complete with all fixings.
-

Non - Standard Items

Contents

Alumasc can tailor designs to meet individual project requirements, whether it is exact matching of rainwater products on restoration projects or stylish design solutions for new, contemporary buildings.

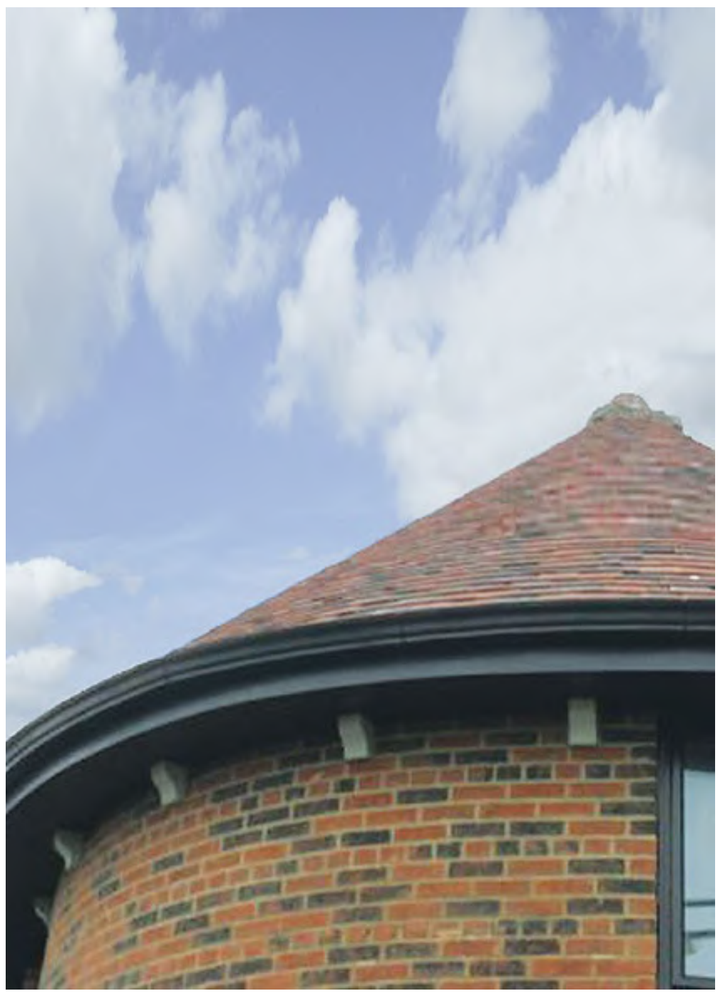

Alternative Gutter Profiles

Alumasc design and supply engineered rainwater systems and have the ability to develop patterns that are tailored to individual buildings' specific needs.

Whether the aim is to match an existing profile or simply to differentiate a building's appearance, Alumasc can offer bespoke gutter profiles to suit.

Radiused Gutter Sections

Where gutters are required to follow a particular roof radius, patterns can be engineered from detailed dimensions or existing gutter installations to yield a fully cast gutter that can be installed to suit the roof parameters. These are generally supplied in 1m lengths.

As an alternative to fully cast sections, Heritage and Aqualine profiles can be fabricated by cutting, mitring and welding to create a segmented radii gutter. GX profiles can be fabricated by mitring and seam-welding sections to create a segmented radii gutter. This often provides a cost effective solution for such architectural detailing.

Fabricated Gutter Sections

Standard gutter profiles can be fabricated into non-standard plan angles that can suit a host of different building geometries. Transition pieces for jointing mismatch gutter shapes, back outlets for drainage through parapet walls can all be expertly manufactured by Alumasc.

Rainwater Heads (Hoppers)

Ornate rainwater heads can be supplied to match existing design or one-off, personalised designs that will add enduring character and value to the building.

Rainwater heads can be manufactured from new patterns by the casting process. Alternatively, due to the flexibility afforded by the use of pressed aluminium sheet, fabricated items can be supplied to suit a whole range of requirements and applications.

Alumasc rainwater heads can also be enhanced by adding ornate enrichments or detailing, such as place names or initials onto the rainwater heads.

Bespoke Bracketry

Alumasc can design and manufacture a variety of bracketry solutions for gutters and pipes to create an integrated system. Such detailing can often be used to support fascia and soffit configurations.

Ornate holderbats and earbelts can be detailed to provide a unique, distinguished appearance to a rainwater stack.

Where standard fitting dimensions do not suit the project's requirements, Alumasc can fabricate pipe systems to accommodate building design.

Ornate pipes can be supplied to match existing designs or one-off, personalised designs. Special enrichments can be added to create enduring character and value to the building.

Alumasc Rainwater Systems

Aluminium Range (Cast & Contemporary) Installation Procedures

Preparatory requirements and installation methods for the Heritage gutter and pipe system, Aqualine gutter system, GX gutter system, Flushjoint pipe system and Guardian security pipe system.

Aluminium Rainwater System Installation - Introduction

Contents

For safe and satisfactory installation of Alumasc rainwater systems, the following good practice guidelines should be reviewed before installation commences. Where unusual or special conditions arise contact Alumasc Technical Services for assistance.

General Preparation and Good Practice

Securely fixed fascia boards must be painted and capable of supporting a fully loaded gutter. Check fascia for straightness and whether shims will be necessary to align brackets without creating stress at gutter joints. Where fascia boards are not being used Alumasc provide top and side fix rafter arm brackets as well as masonry drive-in brackets.

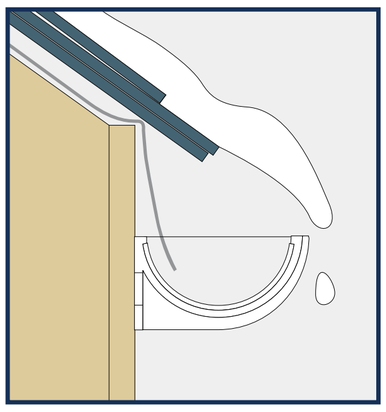

Fix brackets so as to position the gutter centrally and as close below the roof edge as possible, taking into consideration locality and roof slope finish.

If there is a risk of sliding snow, adjust the bracket positions to prevent snow hitting the front of the gutter. Extra fixings, brackets and snowboards should be considered where appropriate.

Where high winds are expected, a small bead of sealant must be applied between gutter and brackets a flexible adhesive. An occasional screw, fixed through a slot in the back of the gutter and into the fascia may be preferred, at a minimum of two per length.

Alumasc advise that the designer and contractor satisfy themselves that the application is suitable.

Setting Out

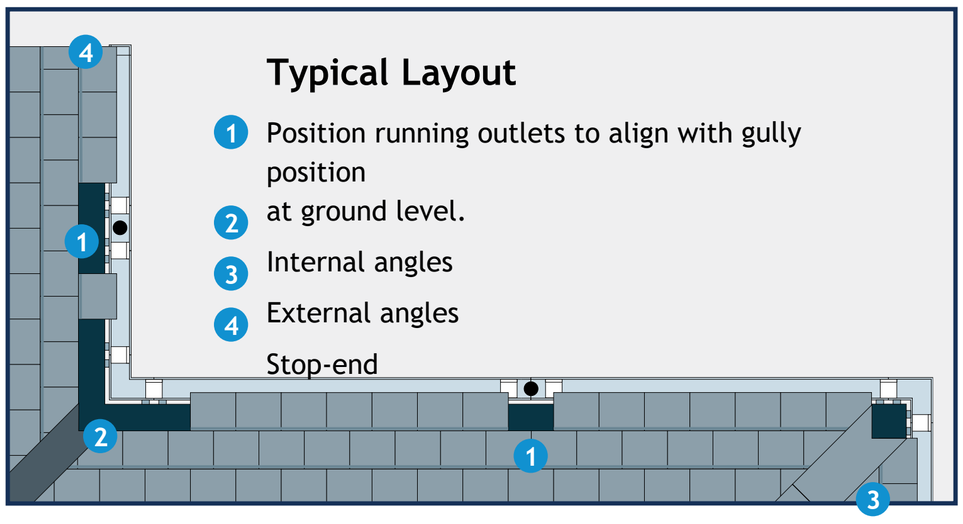

After setting out angles and outlets, fit gutters and brackets according to installation procedures for the specific rainwater system being used, as detailed in this brochure.

Cutting and Drilling

Aluminium can be cut and drilled on site with regular metalworking tools. Pencil cut lines and apply masking tape either side of cut line to protect against accidental saw damage.

Site Painting

Degrease with white spirit and clean thoroughly. Prime with zinc phosphate or similar aluminium primer, followed by at least two coats of full gloss paint on all exposed surfaces. Undercoating is not required. Where powder coated materials have been cut, it is necessary to deburr exposed edges and follow the above painting procedure.

Health and Safety

Always refer to current Health and Safety legislation, safe systems of work and the relevant material safety data sheets.

Storage and Handling

Colour coated rainwater gutters and pipes must be handled with care to prevent scratches and dents. Materials should be stored on a level surface or racking, preferably under secure cover. Uneven fading or water marks on coated and mill finish surfaces may occur if water enters protective packing or goods are stored exposed to sunlight.

Mill finish goods will have manufacturing blemishes such as grinding and fettling marks, welding will be visible on fabricated items and extruded/pressed aluminium items may also be vulnerable to scratch marks or blemishes caused in-transit. It is recommended mill finish material is painted on-site.

Store seals and sealants under cover and make secure and separate provision for solvents. Dispose of packing materials responsibly.

Testing

Allow sufficient time for sealant joints to fully cure. Check all bracket and gutter fixings are secure and plug outlets. Fill up to overflow level (but not beyond). Allow 5 minutes before inspecting all joints for leaks.

Care and Maintenance

Regularly clean out rainwater heads and gutters and ensure that downpipes are clear. Check joints and fixings are secure by periodic inspection no less than twice a year, preferably at the start of Autumn and end of Winter.

Mill finish goods will develop a protective grey aluminium oxide, however it is recommended mill finish material is painted on-site. Polyester powder coated surfaces can be cleaned by washing with warm detergent solution and leathering off.

Aluminium rainwater systems installed in a coastal environment can be subject to harsh atmospheric conditions that can accelerate the oxidization process. Alumasc do not normally recommend using aluminium rainwater systems in such locations. However, applying a double coat of polyester powder coating prior to despatch, together with a strict and frequent maintenance regime, should result in the product having a life expectancy in excess of 15 years.

NB: This life expectancy depends on any installation damage being repaired immediately with appropriate touch-up paint, as should any site-cut ends exposing bare metal, which must be de-burred and then repainted in accordance with Alumasc's site painting procedure.

Please contact Alumasc Technical Services for further information.

Installation - Heritage Gutters

Contents

Heritage gutters are available in a choice of five profiles with a range of brackets to accommodate all types of eaves condition. Each profile range can be connected to aluminium pipework systems in either round, square or rectangular sections secured by standard and offset brackets. Assembly and installation of each profile range must be considered individually, although general aspects of preparation are common to them all as shown below.

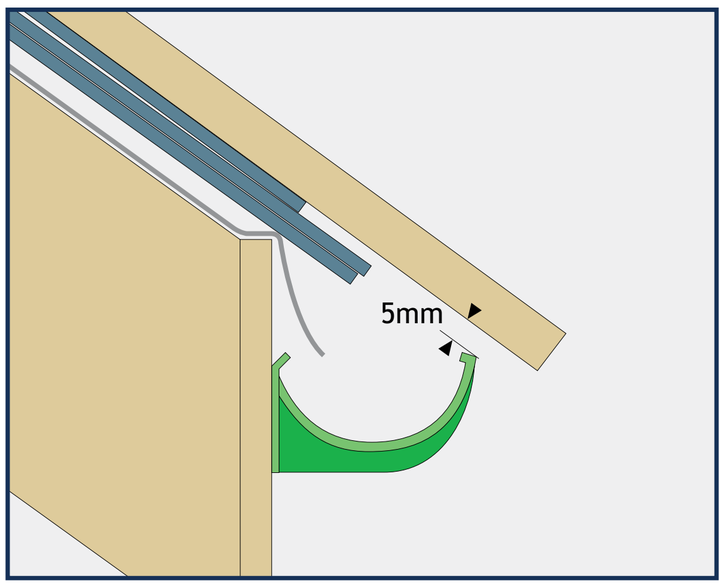

1. Using a straight edge or ruler, shim gutter brackets with 5mm clearance so that the last roof tile or slate will align with the mid point of the gutter.

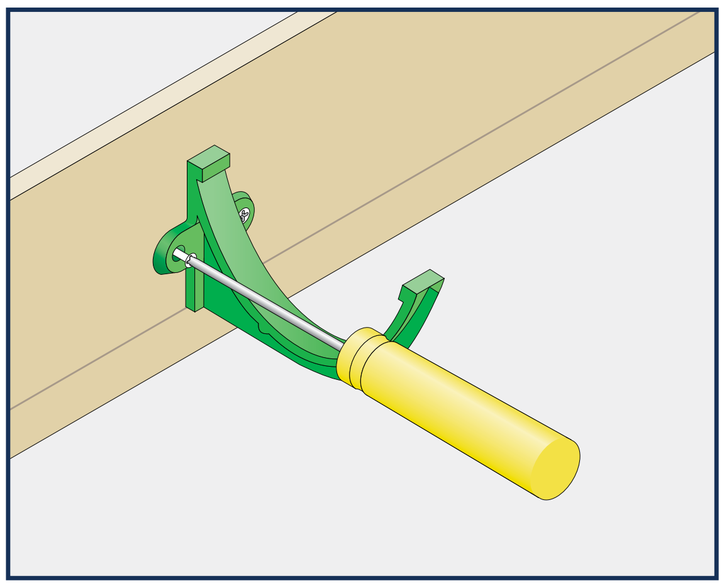

2. Generally, position brackets at 915mm centres. Allow at least 2 brackets per gutter length, 1 per angle and outlet.

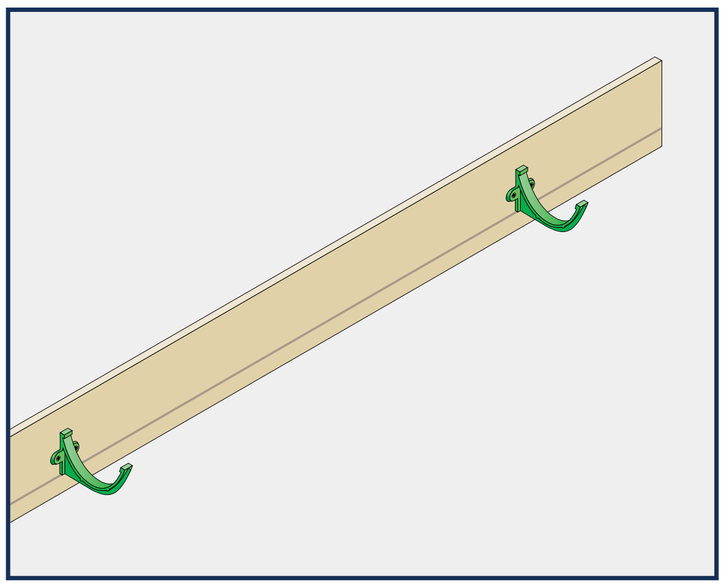

3. Use a string line to set out brackets to a fall of 1:600 to 1:350 (max) or if not possible, level.

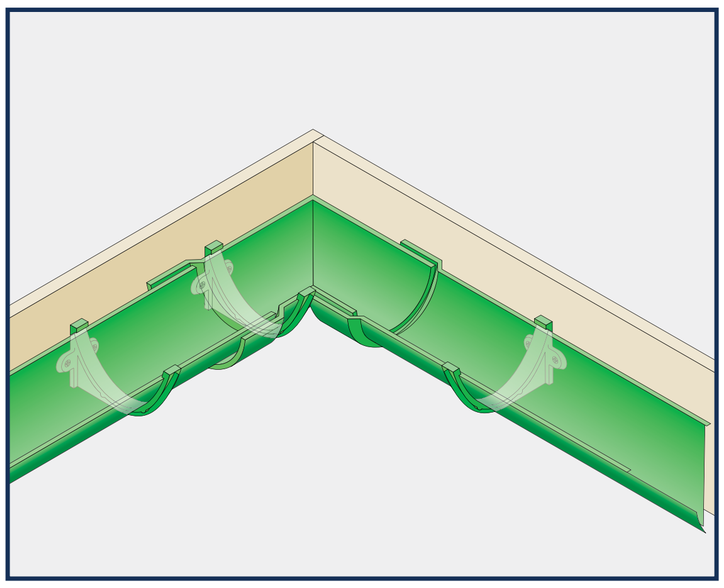

4. Plumb line outlets with gullies at ground level. Position angles, allowing an additional bracket adjacent to the joint with the gutter length.

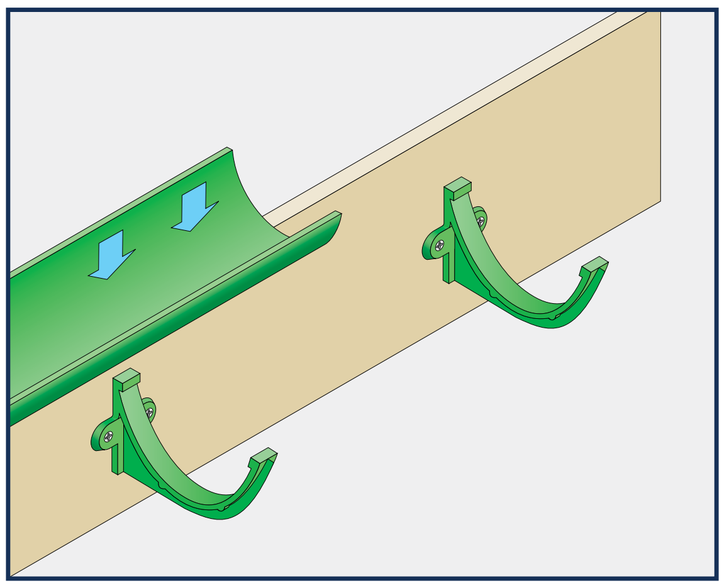

5. Lower the gutter onto the brackets ensuring sufficient clearance for the gutter joint. Clip gutter into bracket.

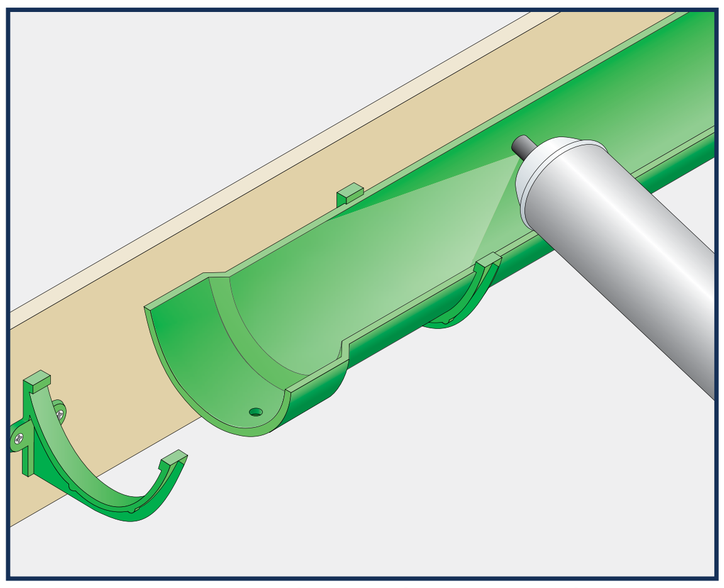

6. Cast gutters overlap at the joint with a spigot and socket. Thoroughly clean and degrease the ends that must be jointed.

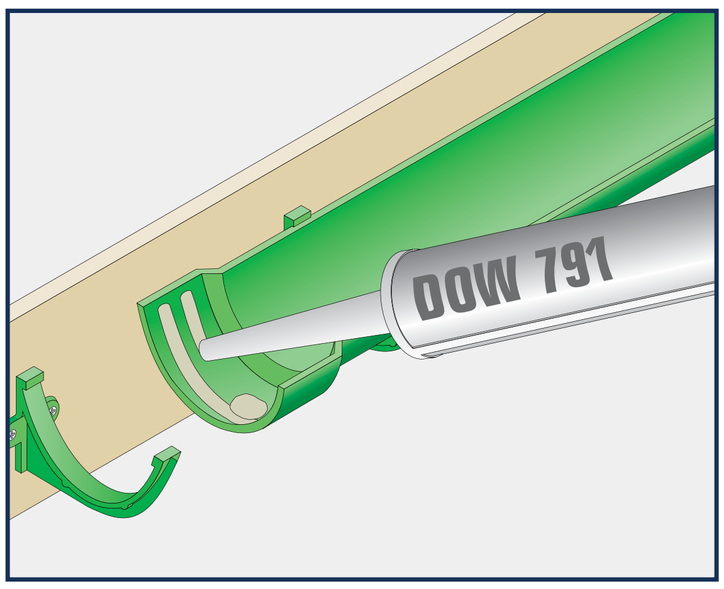

7. Apply two 6mm beads of DOW 791 silicone sealant either side of, and around the fixing hole.

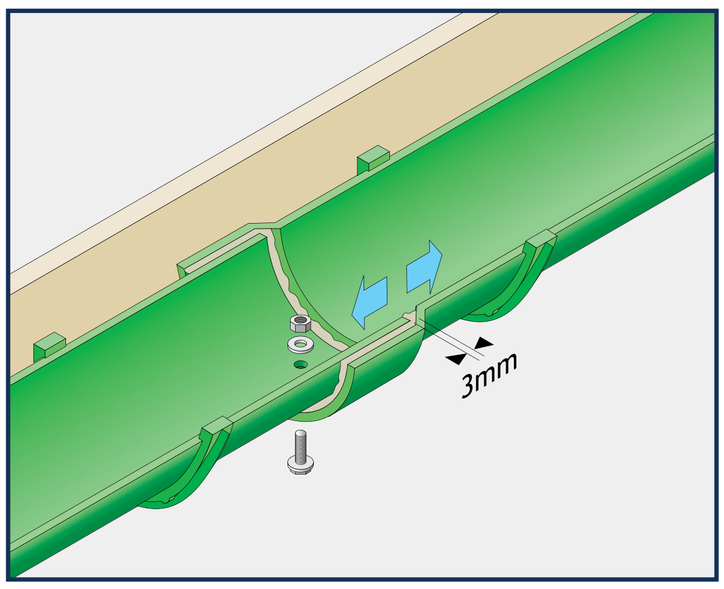

8. Insert the spigot end of the gutter allowing a 3mm expansion gap. Secure joint using aluminium M6 x 20mm nut, bolt and washer provided. (Bolt head preferably to underside).

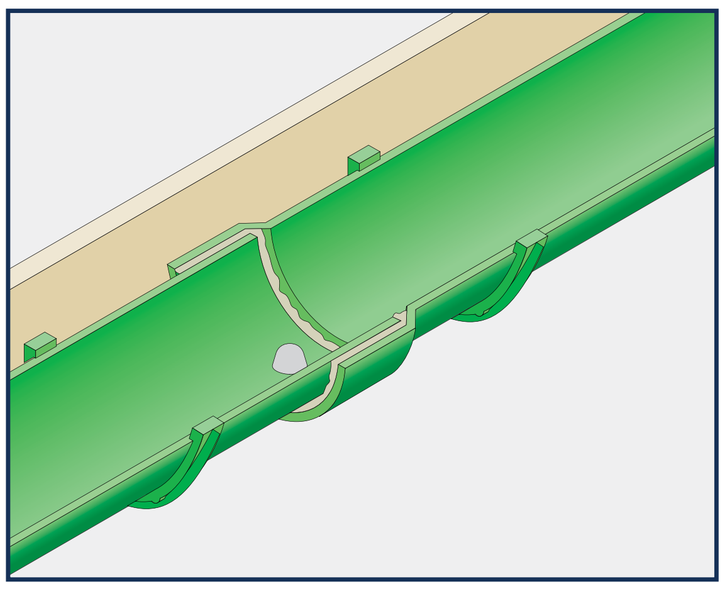

9. Finally, cone-off the exposed bolt stud and nut inside the gutter with a generous application of silicone sealant. Tool off excess silicone around the joint and from external surfaces.

Installation - Heritage Rainwater Pipes

Contents

Heritage traditional rainwater pipes have cast pipe sockets either with ears for wall fixing or without for use with pipe clips. Installation is generally from the eaves downward.

Where sockets are supplied separately these must be lightly driven home into the rainwater pipe using a softwood block or adequate protection at the pipe end to prevent damage. Saw cuts must be square and free from dents and burrs. A light application of silicone sealant must be applied to both surfaces to ensure a waterproof seal.

Pipe Alignment

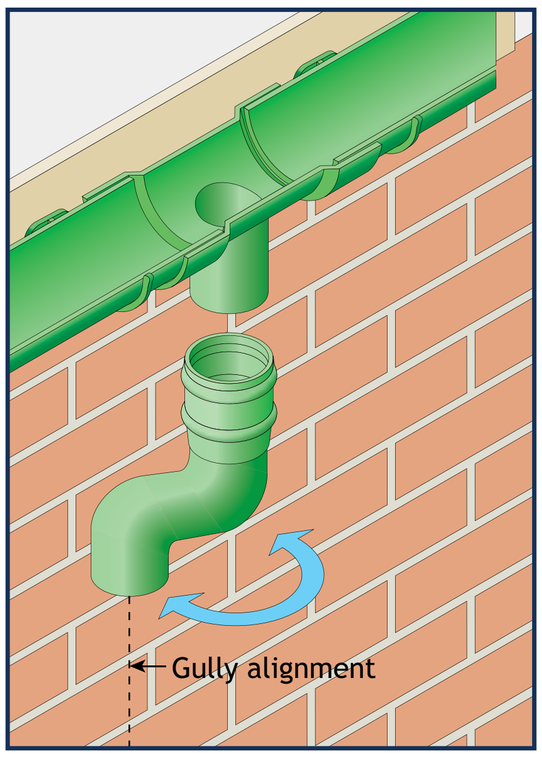

Where square or rectangular pipes are being installed and offsets are required, alignment between the gutter outlet and gully must be exact.

Round pipe systems are more flexible to install and offsets can be adjusted and "swung" into alignment with the gully position.

Outlets and Offsets

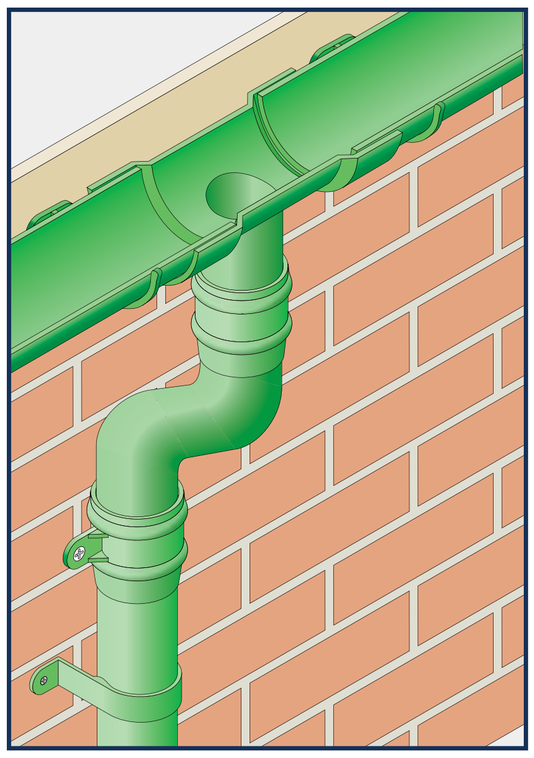

Commence installation from the gutter outlet by fitting and adjusting the one part or two part offsets.

Check vertical plumb line positioning and seal spigot and socket joints using DOW791 silicone sealant.

Pipe Jointing and Fixing

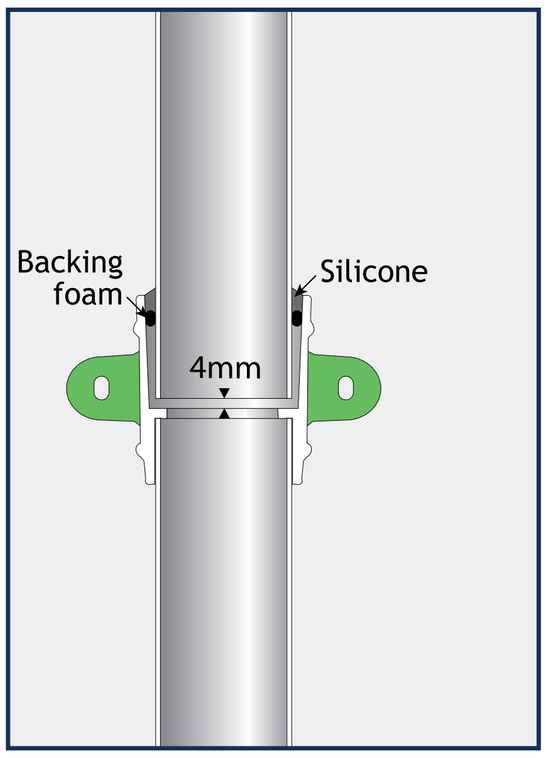

Allow a 4mm expansion gap between pipe end and socket, and insert a 6mm backing foam into the pipe joint. Seal with DOW 791 silicone sealant.

Fix to wall at 2m centres using No12 x 50mm screws. Eared sockets have elongated fixing holes to permit the use of pipe nails.

Pipe Clips

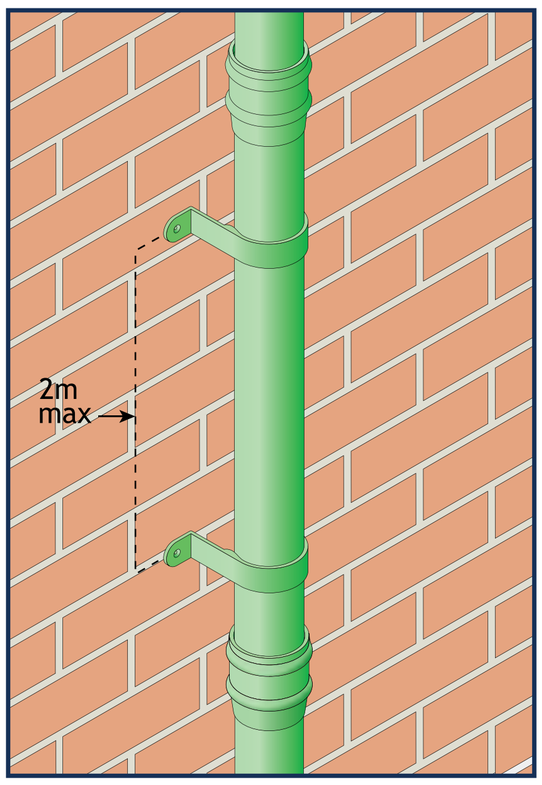

Where uneared pipework is being used it must be secured at maximum 2m centres.

Pipe clips should be chosen according to visual or practical considerations and comprise Standard Base, Small Base and Extended Base options.

Bends and Branches

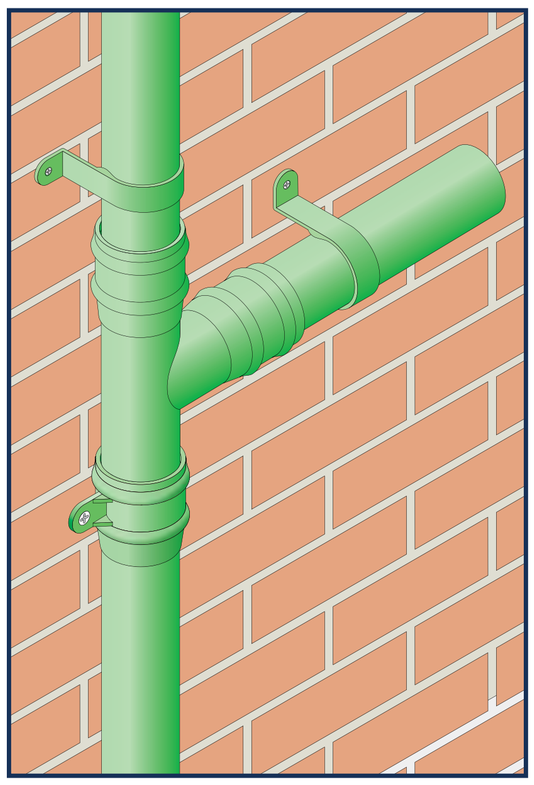

Bends and branches are secured into the pipe socket. Where additional fixing is required e.g a change of direction at a bend, use additional pipe clips.

Shoes and Access Pipes

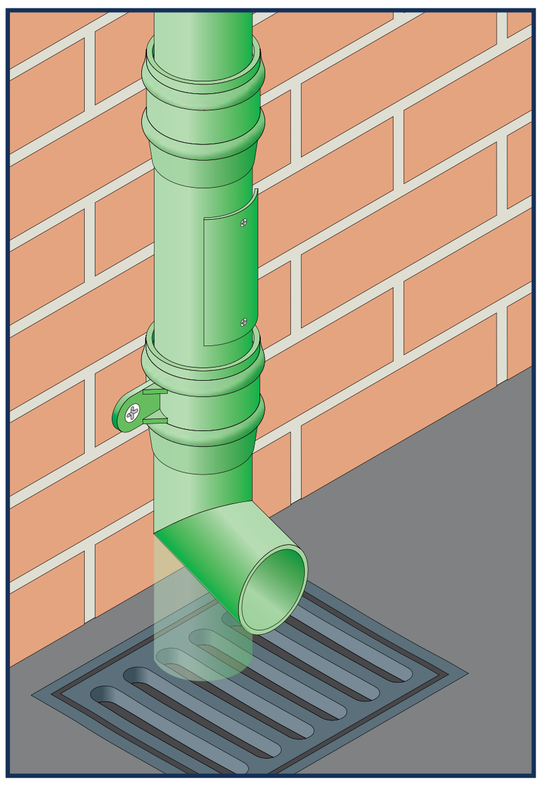

At ground level rainwater pipes can terminate with a shoe for free discharge over a gully or be directly connected into the gully.

In the case of direct connections it is recommended that an access pipe fitting is included within 750mm of ground level.

Tools Required

- String or plumb line
- Tape measure
- Drill
- File
- Masonry bit
- Wall fixing (e.g raw plug)
- Cleaning rags
- Marker pen
- Solvent cleaner
- Posi and plain screwdriver
- Paintbrush
- Hacksaw
- Masking tape
- Mastic gun
- Spirit level
- Protective gloves
- Adjustable spanner

General Installation Sequence

- Complete installation of gutters; alternatively, locate rainwater heads
- Position offsets, bends and branches
- Fit pipes and brackets
- Fit plinth offsets
- Fit access doors and shoes

Sealant

For durable all weather seals and best results, Alumasc recommend the use of
DOW 791 silicone sealant.

Rainwater Heads

Fix to masonry through external lugs or preformed holes in back.

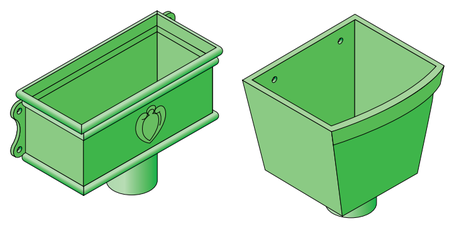

Installation - Aqualine Gutter & Bracket Preparation

Contents

Aqualine gutters are available in five profiles which are supported on secret fix brackets. Joints are made flush using dry seals and slide locks. As a dry jointed system, each gutter profile range is supplied with the required components to achieve a successful installation. Refer to the Rainwater System Installation Guidance on page 97 and review the information below before fitting the Aqualine gutter range.

Jointing Tool

The jointing tool is used to compress the gutter seals whilst positioning slide locks.

Slide Locks

Seen here are the 3 types of slide lock (depending on rainwater system) shown positioned as they would be inserted.

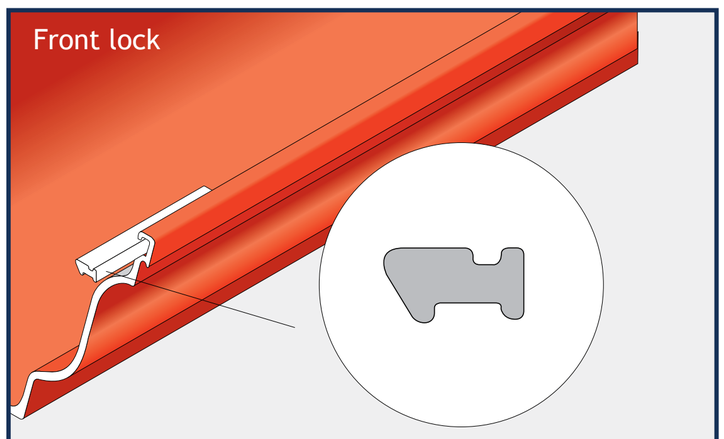

Product Code: **E/SLIDE**

For use with the front of all profiles except modern

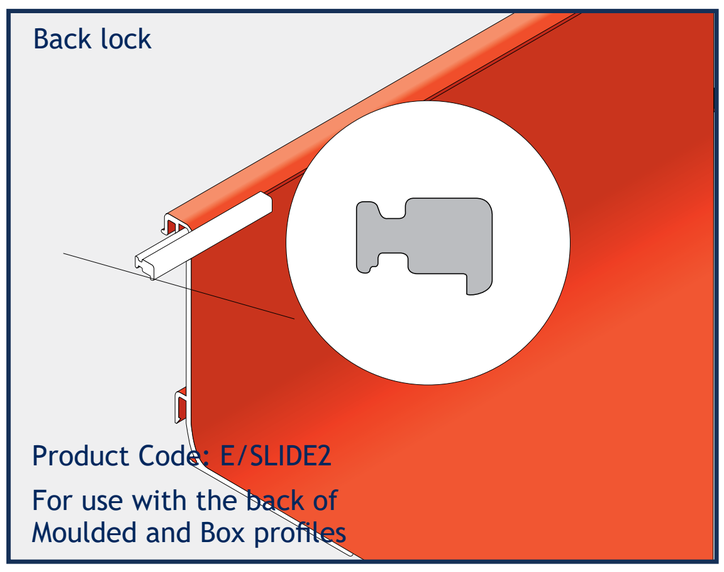

Product Code: E/SLIDE2

For use with the back of Moulded and Box profiles

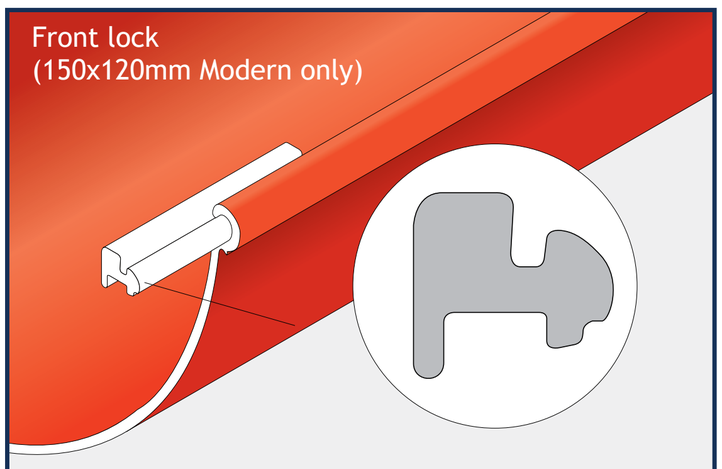

Product Code: ZAQUA130084

For use with the front of the Modern profile only

Aqualine Brackets

There are two types of Aqualine gutter bracket depending on the Aqualine gutter profile to be installed.

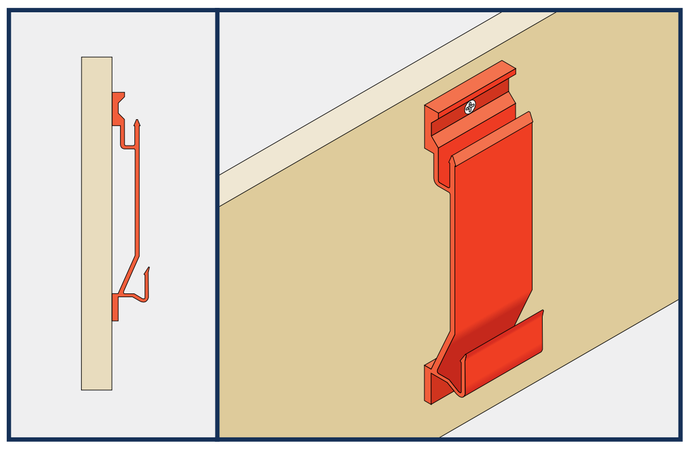

Bracket for Half Round and Deep Run gutters

(Supplied to colour match gutter)

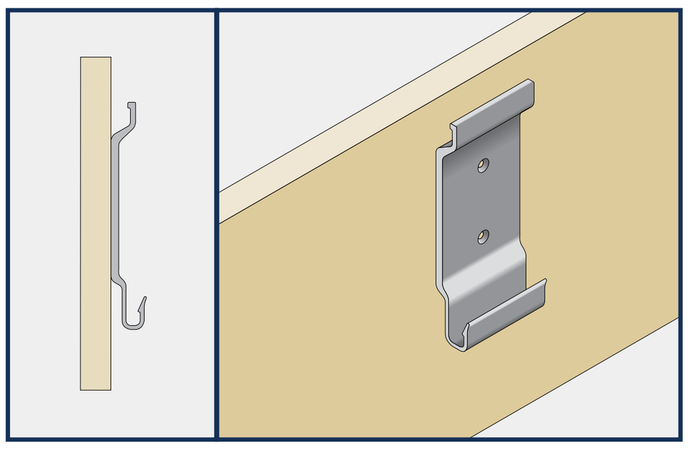

Bracket for Modern, Moulded and Box gutters

(Supplied mill finish)

Aqualine Starter Pack

Starter Packs contain essential installation items.

- P80 joint seal lubricant
- 2 x jointing tool
- 10 x spare slide locks
- 20 x spare No 12 screws
- 8 x spare seal strips
- 20 x shims

When unpacking locate the Aqualine Starter Pack and keep in a safe place.

Aqualine starter pack

Setting Out

As a guide there would be 4 brackets per 3m length. Position angles using 2 brackets per angle inset 150mm from each open end. Position outlets using 1 bracket inset 75mm from open end. At gutter ends where there is no outlet, position 1 bracket inset 150mm.

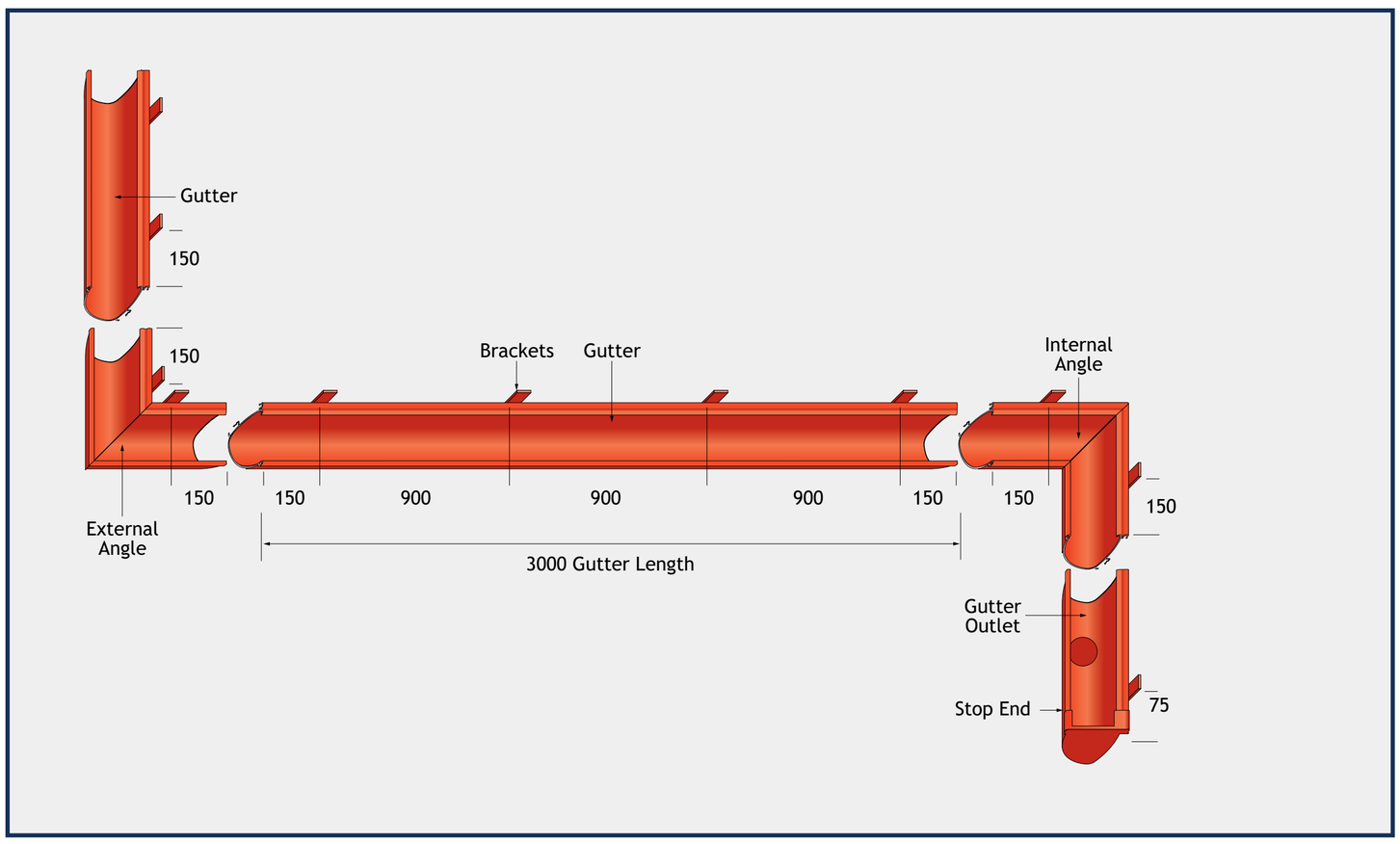

Installation - Heritage Rainwater Pipes

Contents

Aqualine gutter systems are supported on concealed bracketry which requires pre-painted fascia boards to be straight and level. The use of shims provided in the Aqualine Starter Packs assists bracket alignment and improves gutter connections whilst minimising stress within the joints. As a guide there are 4 brackets per 3 metre gutter length. Position angles using 2 brackets per angle, inset 150mm from each open end. Position outlets using 1 bracket inset 75mm from open end. At gutter ends where no outlet exists, position 1 bracket inset 150mm.

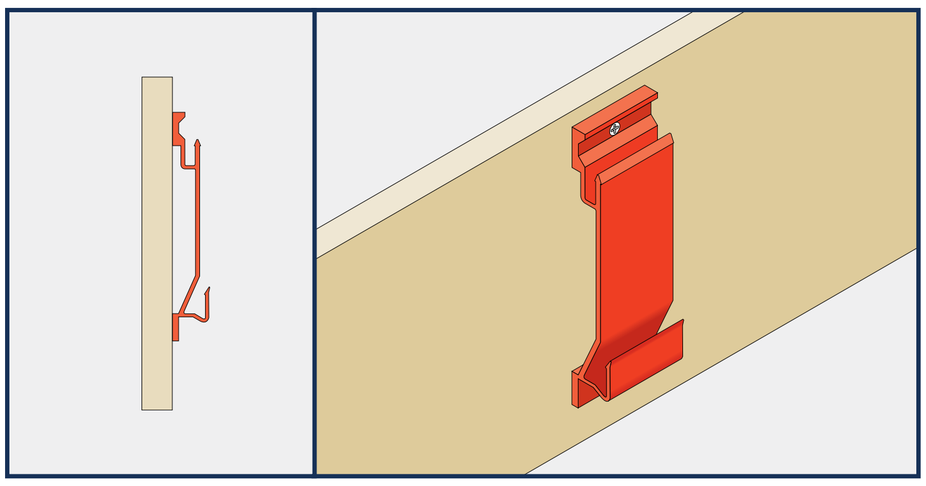

Bracket for Half Round and Deep Run gutters.

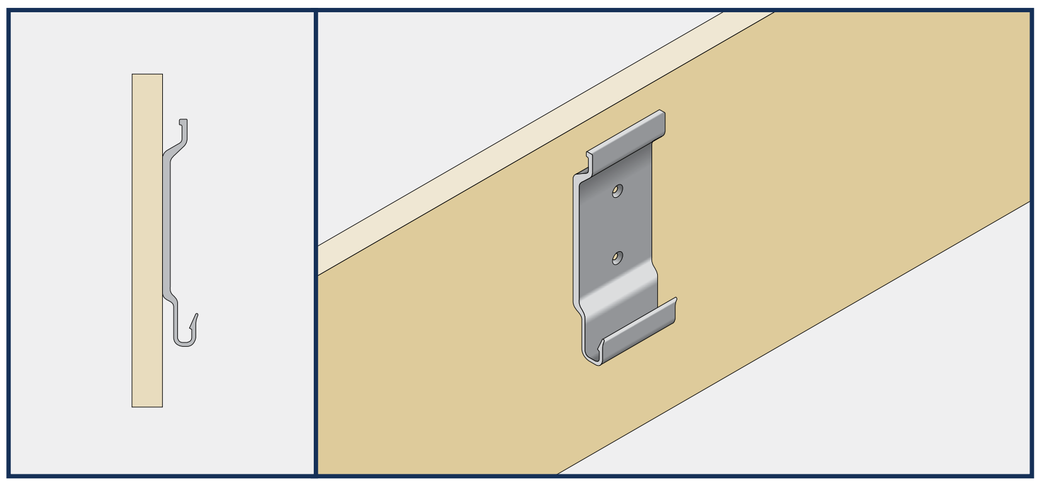

Bracket for Modern, Moulded and Box gutters.

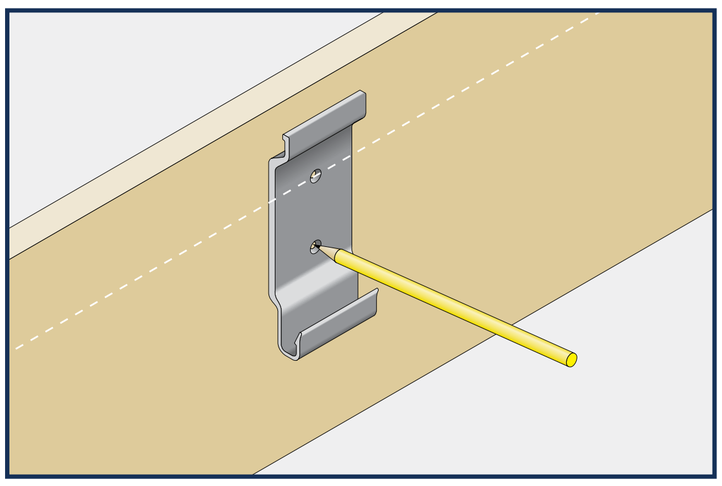

1. Use a string line or laser to set out brackets. (Aqualine must be laid level).

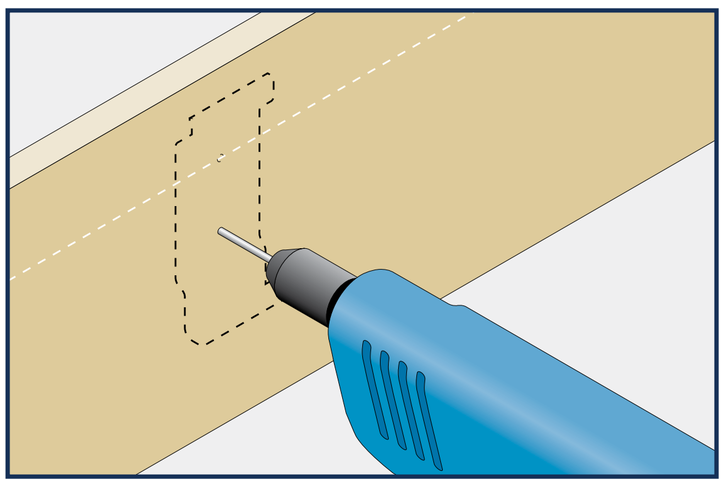

2. Position and pilot 3.5mm diameter hole.

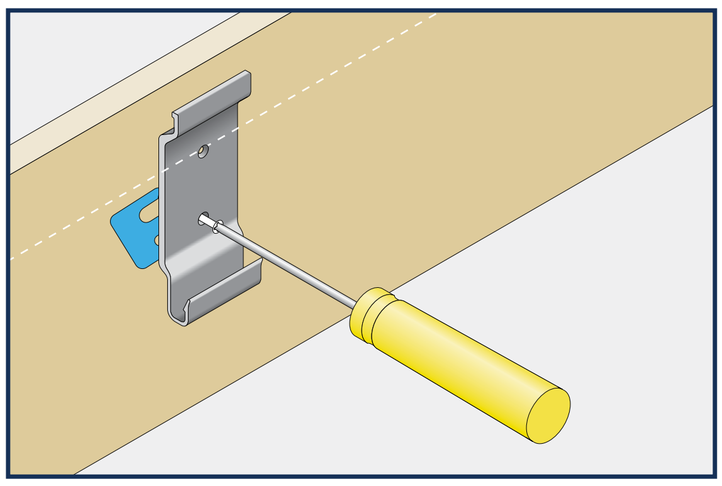

3. Lightly tighten and shim if necessary to align plumb. Fix using No12 x 38mm roundhead screws.

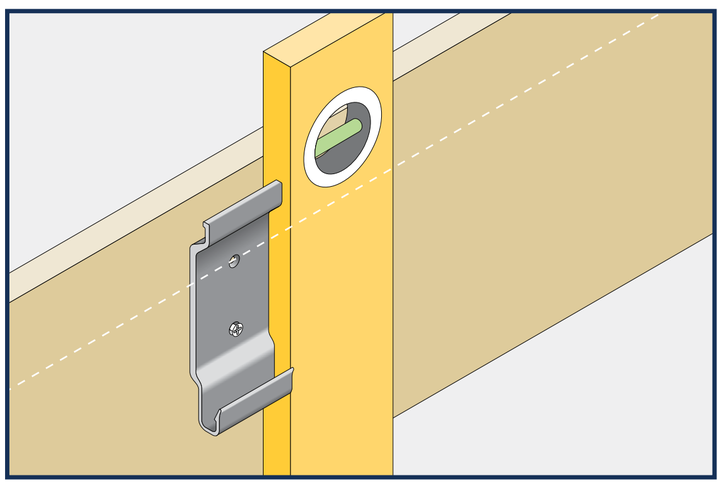

4. Set square.

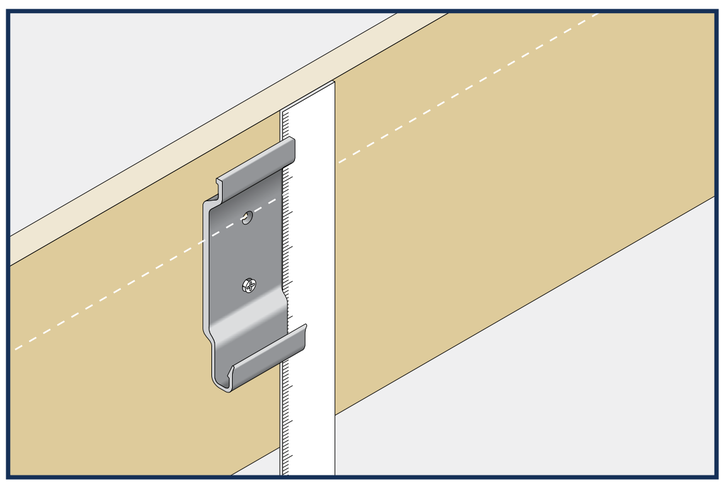

5. Check positioning and adjust if necessary.

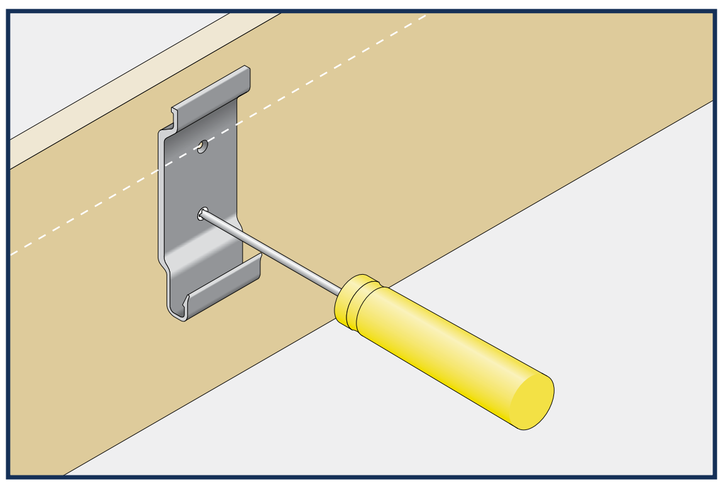

6. Tighten.

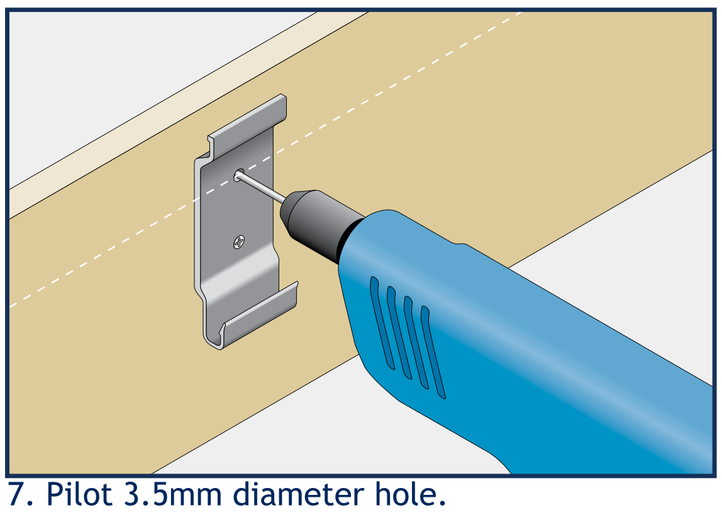

7. Pilot 3.5mm diameter hole.

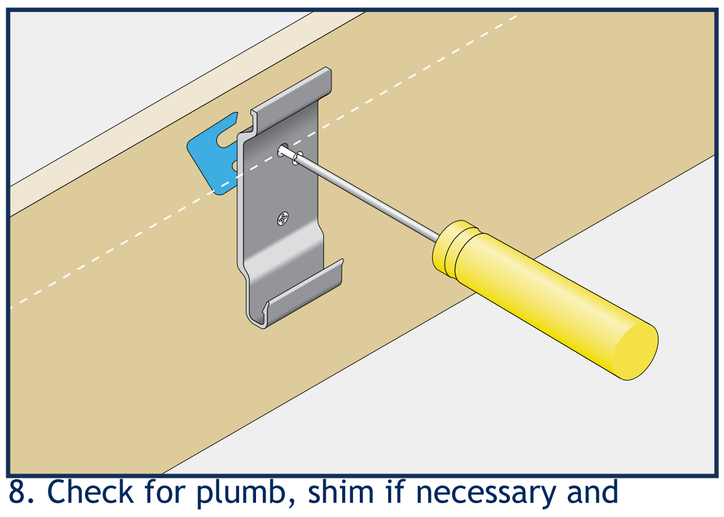

8. Check for plumb, shim if necessary and tighten.

Installation - Aqualine Half Round, Deep Run & Modern Gutters

Contents

Aqualine Half Round, Deep Run and Modern gutters use a unique dry jointing system to give a completely clean external appearance. Gutters drop and lock onto concealed brackets where internal joints are aligned and locked using slide bars. Assembly of Half Round, Deep Run and Modern gutters requires the use of single front lock bars. The entire gutter system is completely secure whilst at the same time allowing free linear thermal movement.

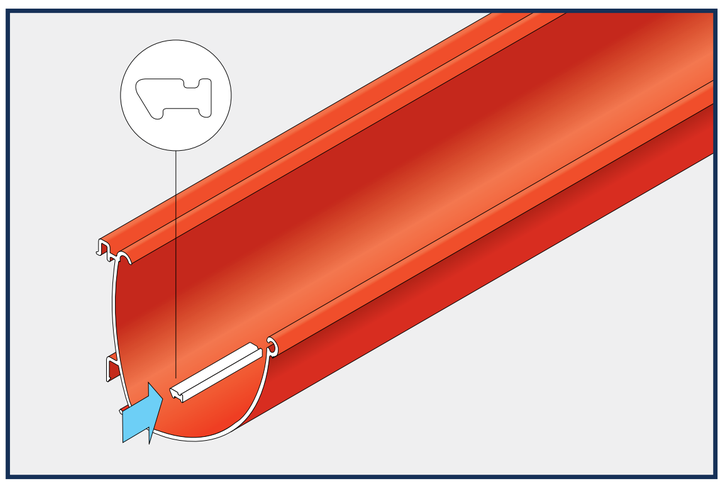

1. Pre-insert slide lock bars (1 per joint). Check for right way up.

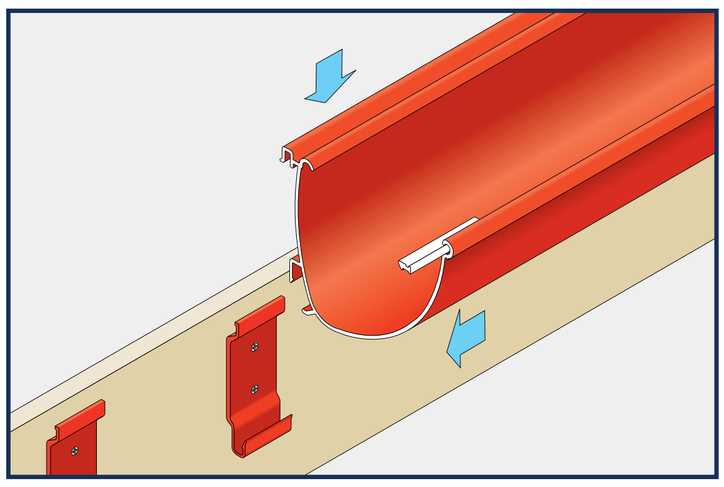

2. Position gutters loosely, do not lock down.

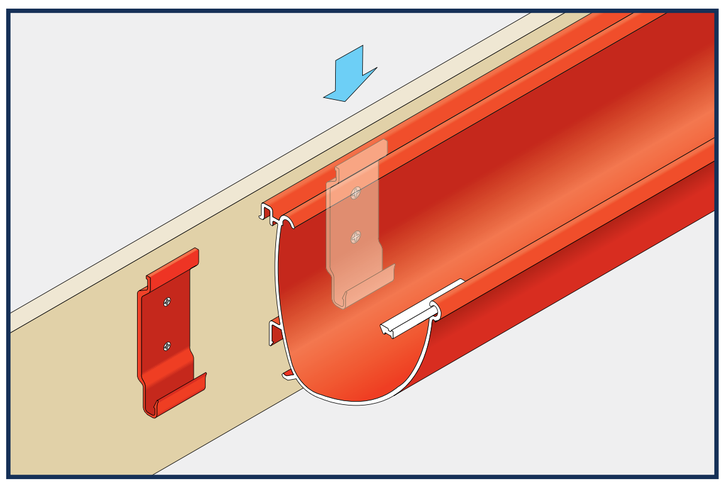

3. Locate gutters onto top rail of brackets and allow 4mm gap.

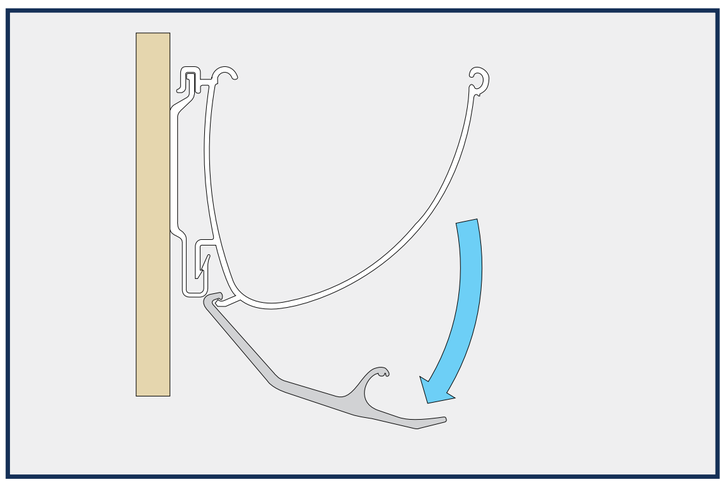

4. Lock down gutter with Aqualine jointing tool.

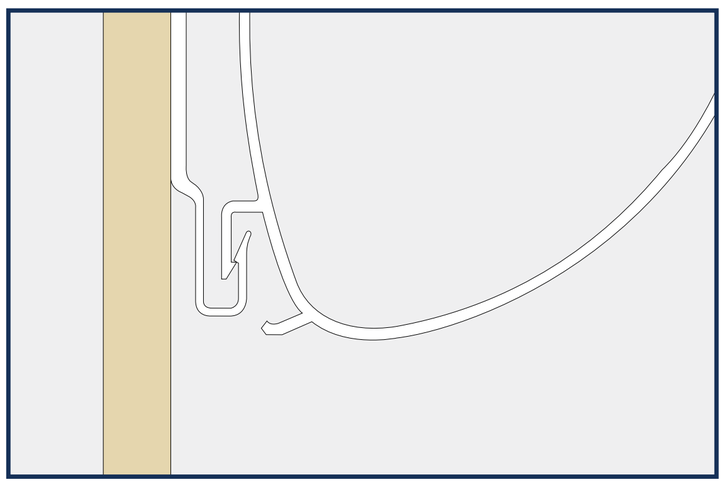

5. Check for positive location.

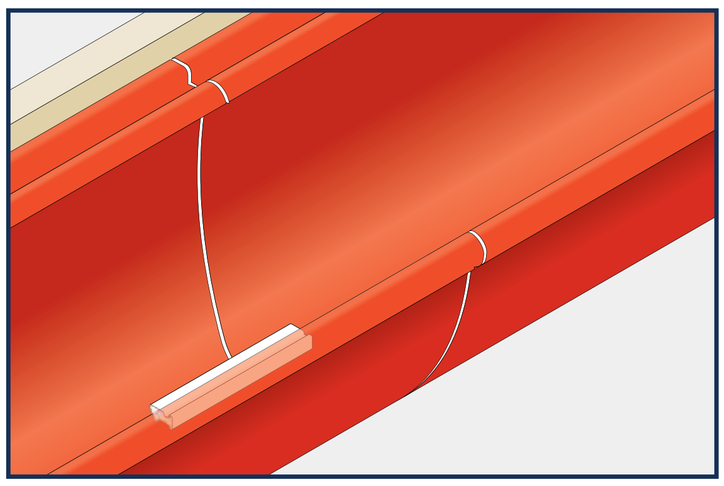

6. Slide lock bar within 50mm of joint but NOT across gutter joint.

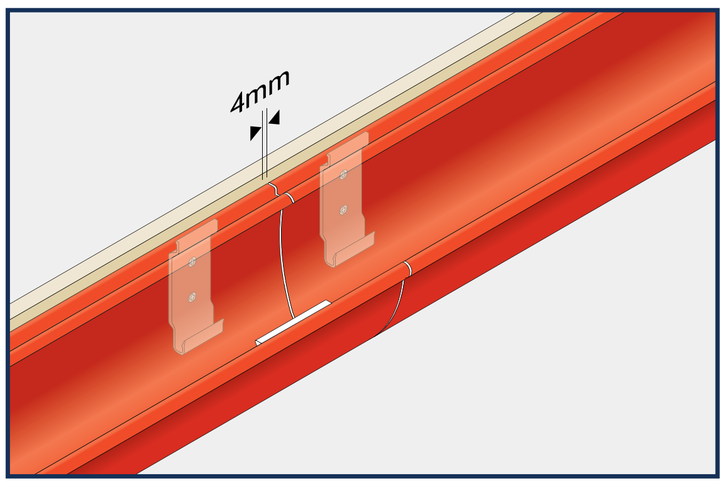

7. Check and reset 4mm expansion gap as necessary.

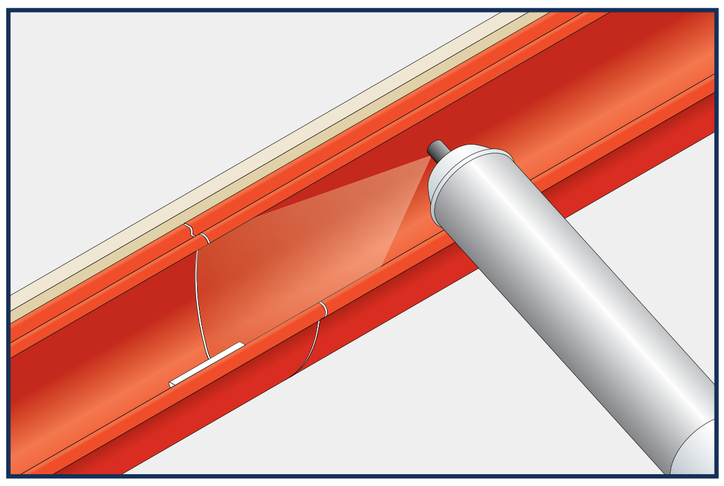

8. Clean jointing surfaces and spray apply Alumasc lubricant.

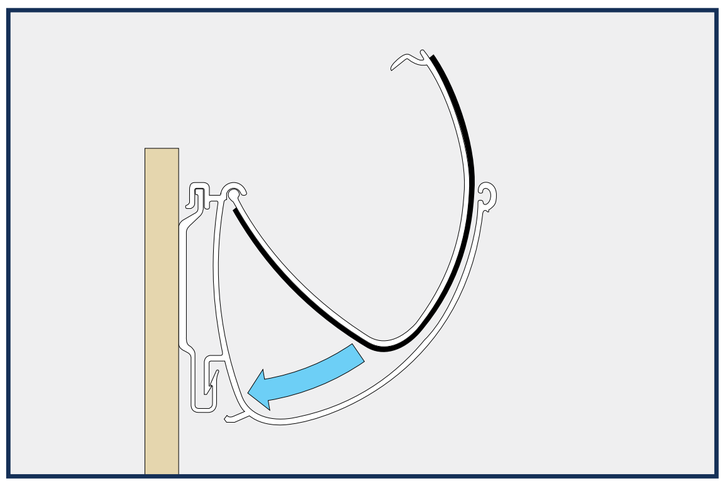

9. Hook joint union into gutter receiver channel and pivot down.

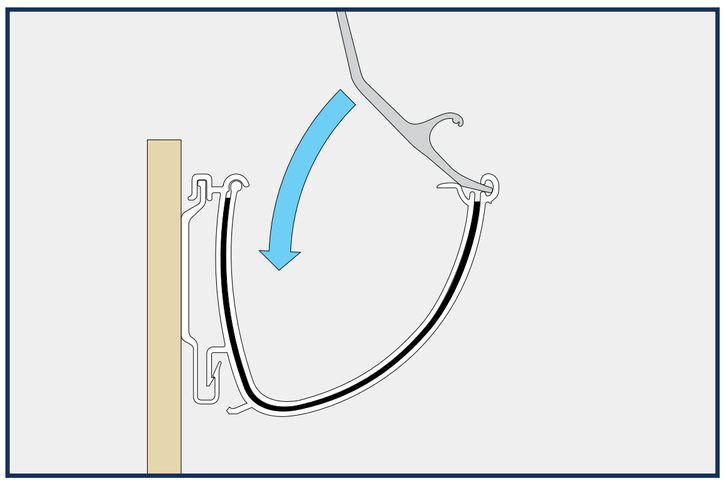

10. Compress joint union and start lock bar across joint.

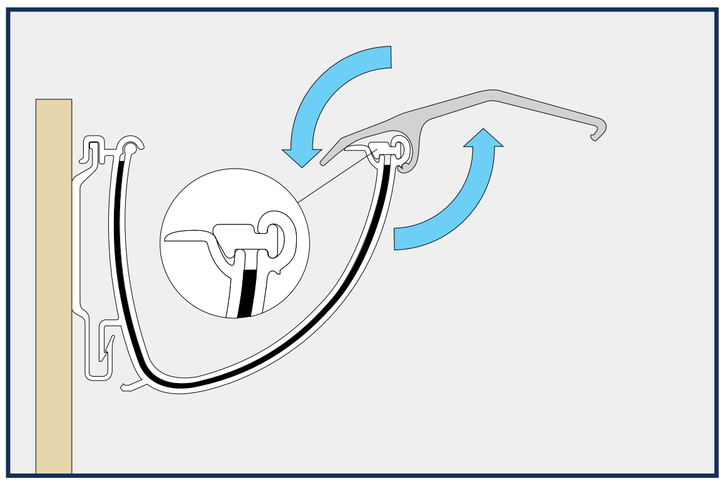

11. Reverse tool apply equal pressure around pivot point to complete lock bar positioning fully across joint. Take care not to dislodge gutter from fascia bracket.

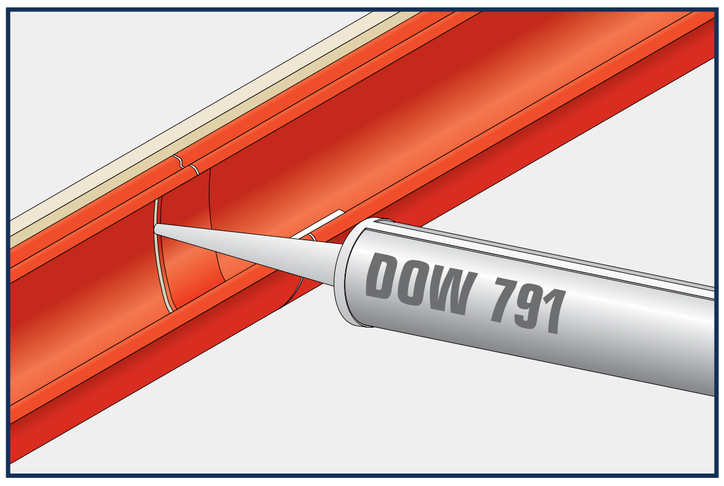

12. Dry gutter and apply DOW 791 silicone sealant to weather edges of union.

Installation - Aqualine Moulded & Box Gutters

Contents

Aqualine Moulded and Box gutters use a unique dry jointing system to give a completely clean external appearance. Gutters drop and lock onto concealed brackets where internal joints are aligned and locked using slide bars. Assembly of Moulded and Box gutters requires the use of lock bars located at the front and rear. The entire gutter system is completely secure whilst at the same time allowing free linear thermal movement.

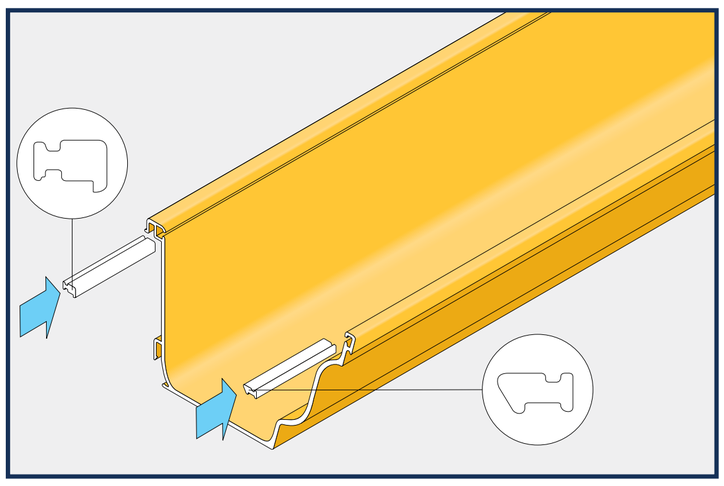

1. Pre-insert slide lock bars front and rear. Check for right way up.

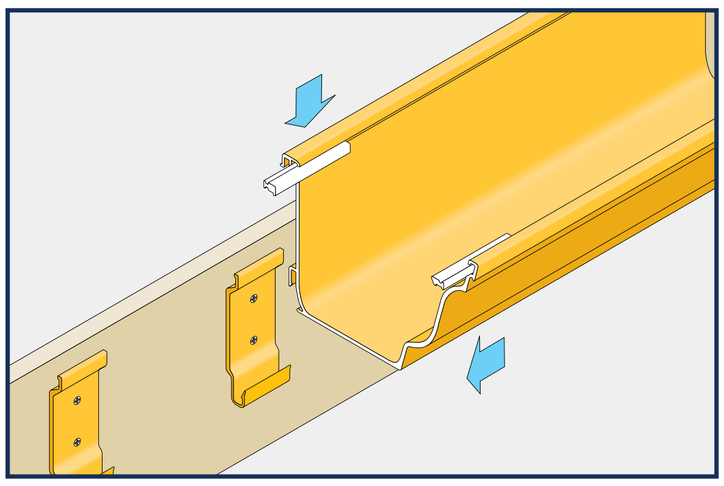

2. Position gutters loosely, do not lock down.

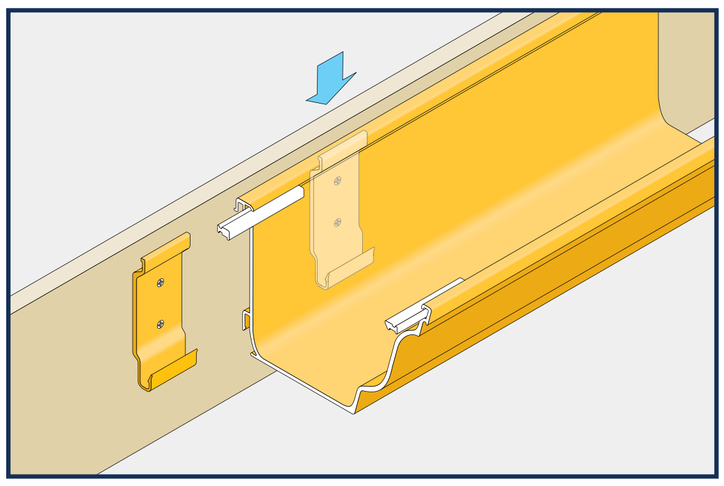

3. Locate gutters onto top rail of brackets and allow 4mm gap.

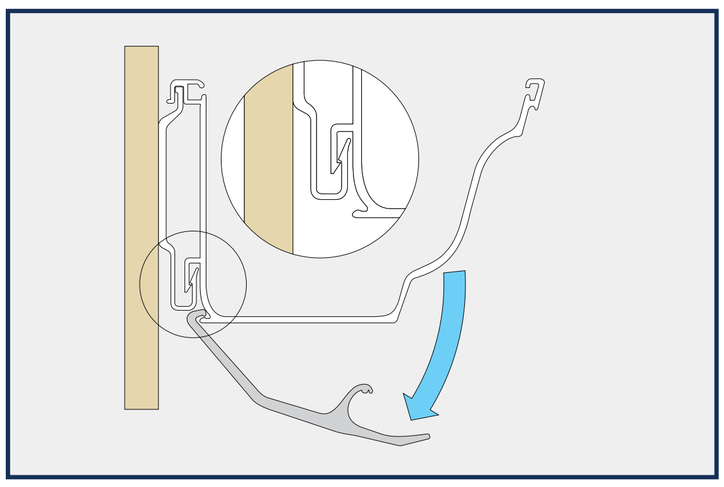

4. Lock down gutter with Aqualine jointing tool and check for full location.

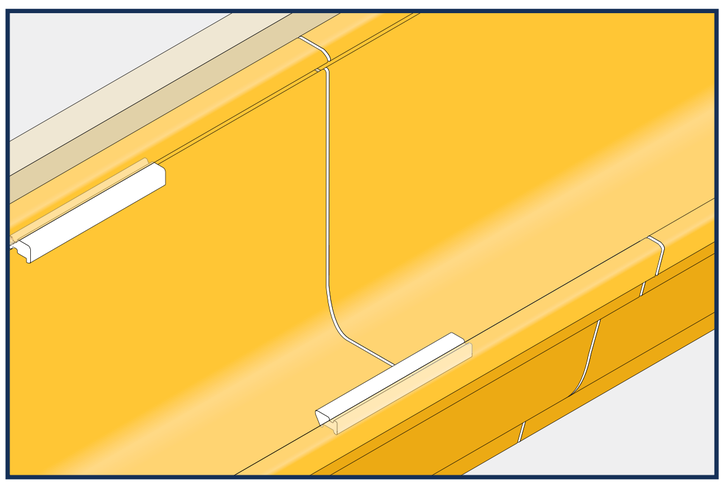

5. Slide lock bars up to but NOT across gutter joint.

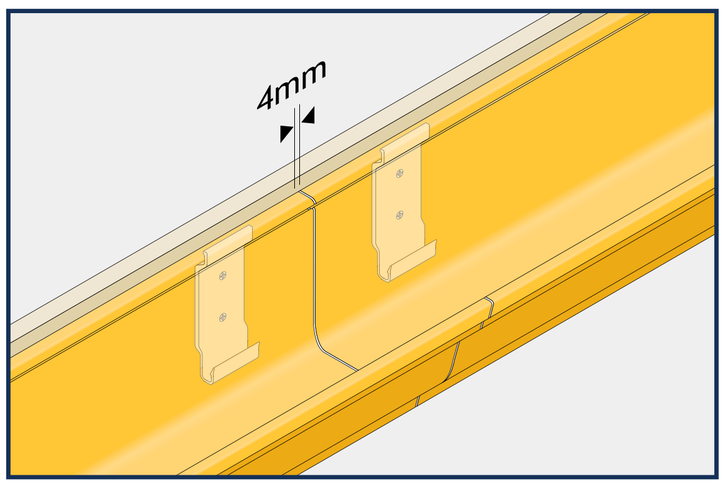

6. Check and reset 4mm expansion gap as necessary.

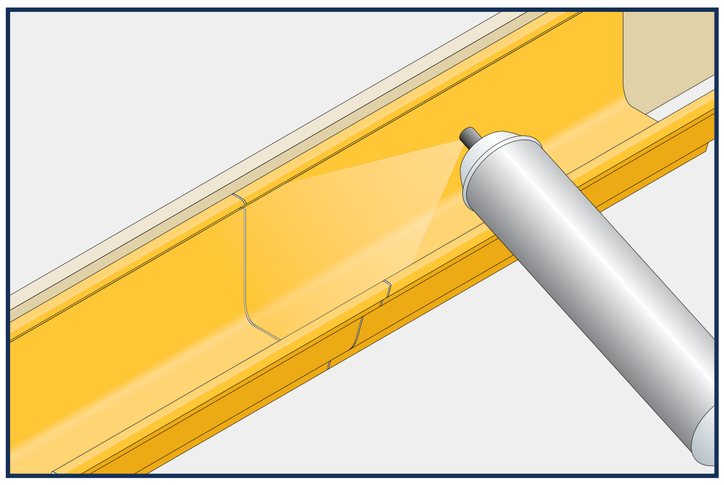

7. Clean jointing surfaces and spray apply Alumasc lubricant.

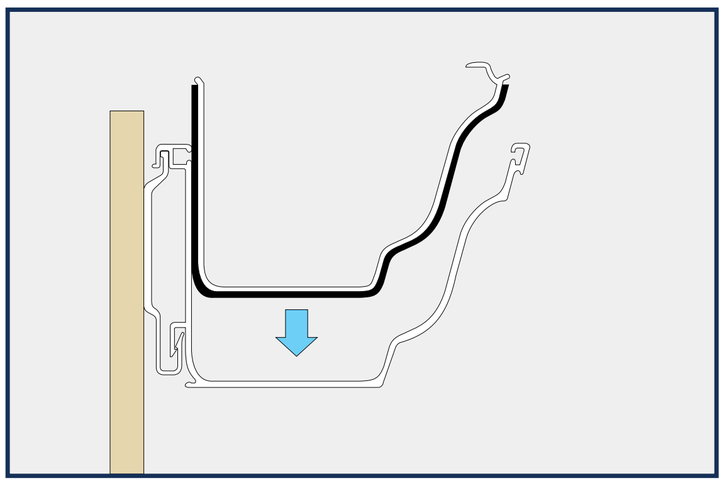

8. Push in joint union from above.

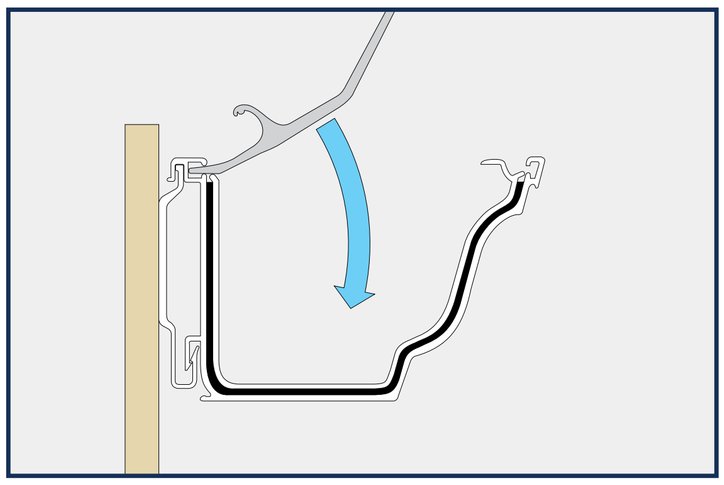

9. Compress joint union (back) and slide rear lock bar fully across joint.

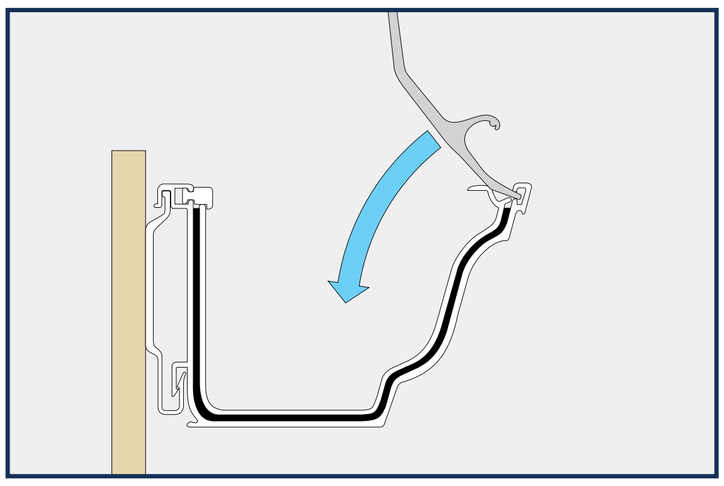

10. Compress joint union (front) and start front lock bar across joint.

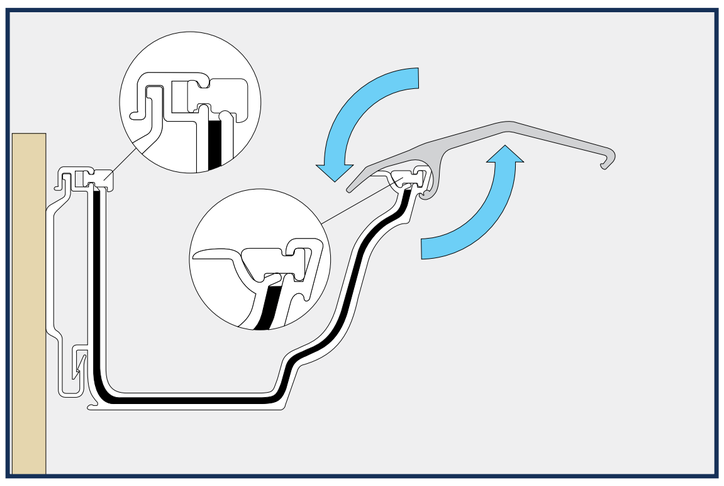

11. Reverse tool apply equal pressure around pivot point to complete lock bar positioning fully across joint. Take care not to dislodge gutter from fascia bracket.

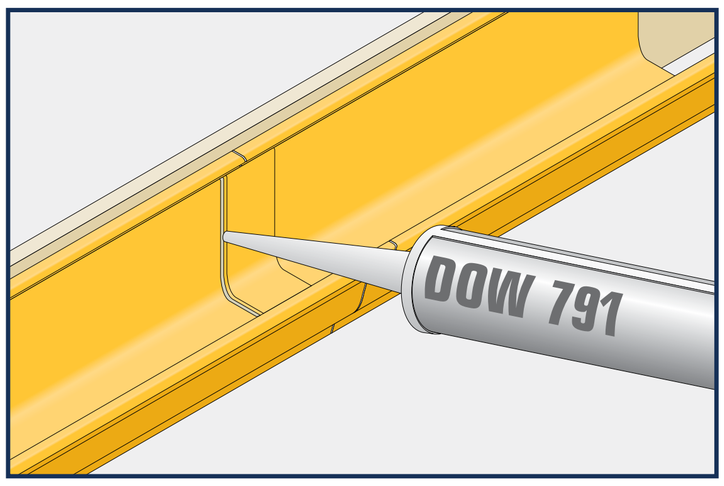

12. Dry gutter and apply DOW 791 silicone sealant to weather edges of union.

Installation - AX SnapFix Half Round Bracket Fixing

Contents

AX SnapFix Half Round, Deep Run and Moulded extruded aluminium gutter profiles, jointed with internal union clips. A range of brackets are available to accommodate all types of eaves condition. AX SnapFix profiles can be connected to aluminium pipework systems in either round, square or rectangular sections and secured by standard or offset brackets. The installation procedure is the same for AXS Half Round, AXS Deep Run and AXS Moulded gutter.

General Fixing Instructions

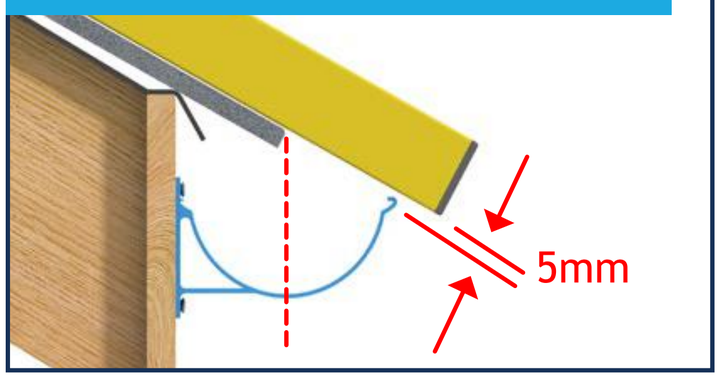

1 Using a straight edge, shim gutter brackets with 5mm clearance so that the last roof tile or slate will align with the midpoint of the gutter.

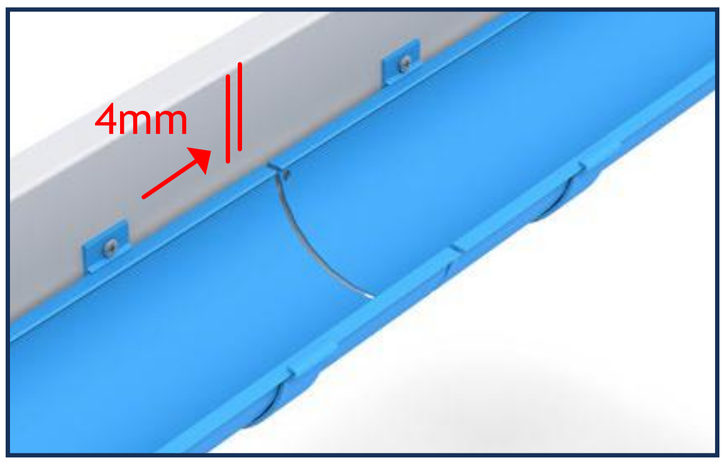

5) When joining gutter lengths, allow for a 4mm expansion gap.

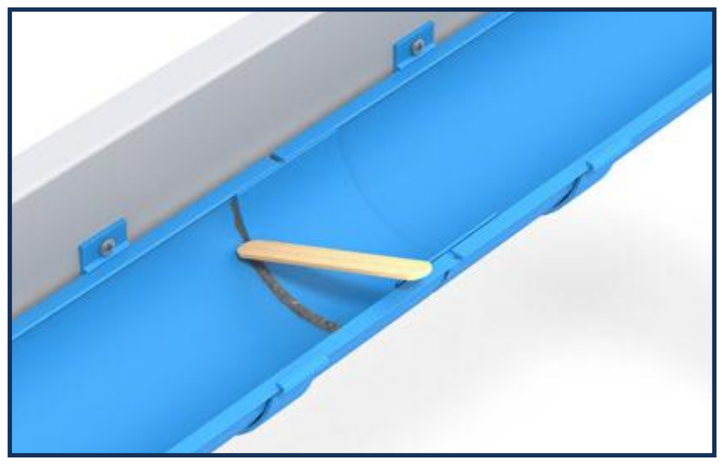

9) Tool-off displaced silicone sealant from the newly formed gutter joint. Allow to cure for 24 hours

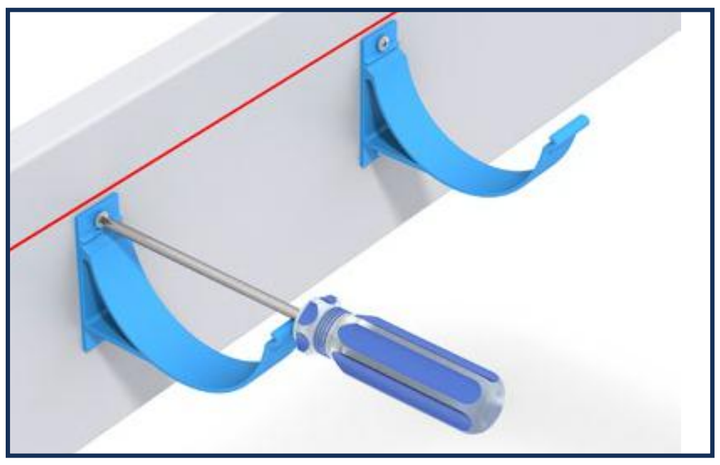

2) Using a string or laser to establish a true line and level of the gutter. Prepare to use packing pieces under brackets where there are depressions. Position fascia brackets at 900mm centres in accordance with BS EN 12056-3:2000. Fix brackets with two No 12 x 38mm round-head screws.

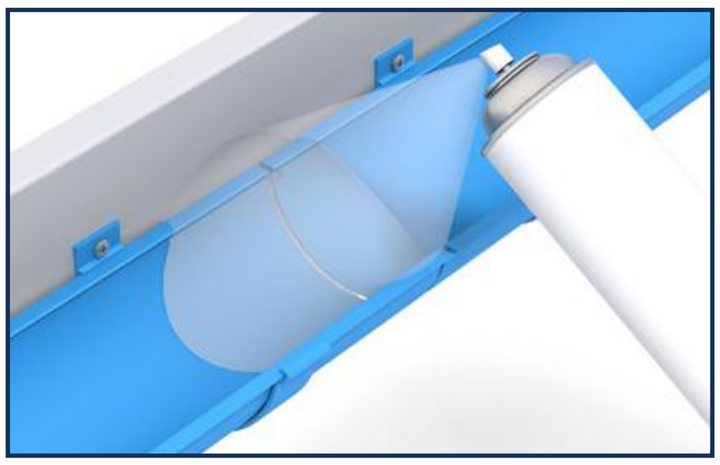

6) De-grease and clean each union and gutter length/fitting to 50-100mm from the end.

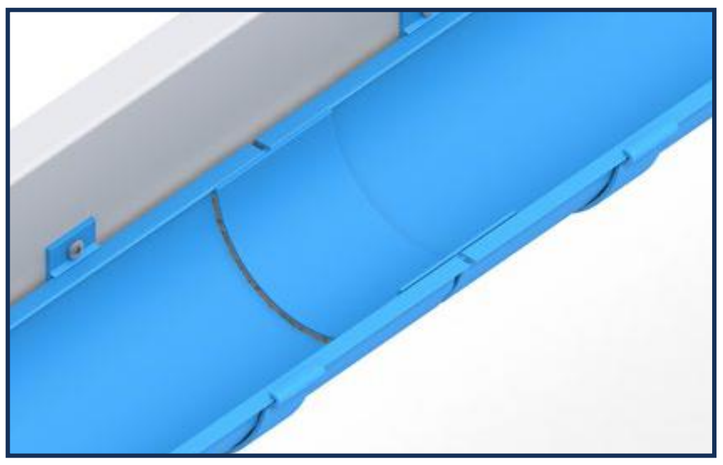

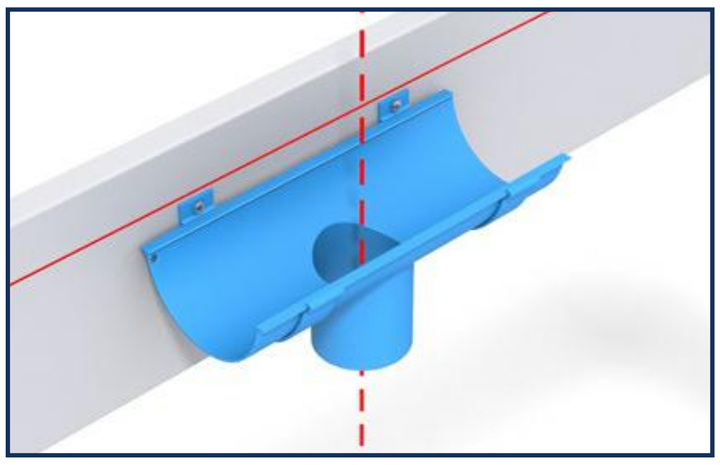

3) Plumb line outlet positions with gullies at ground level.

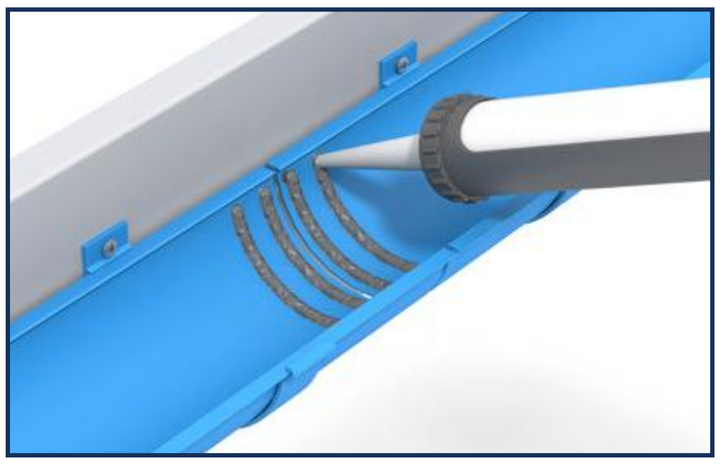

7) Apply two 4-6mm beads of Dow Corning 791 low-modulus Type A silicone sealant to ends of gutter profile. Silicone sealant must be applied only to completely dry surfaces.

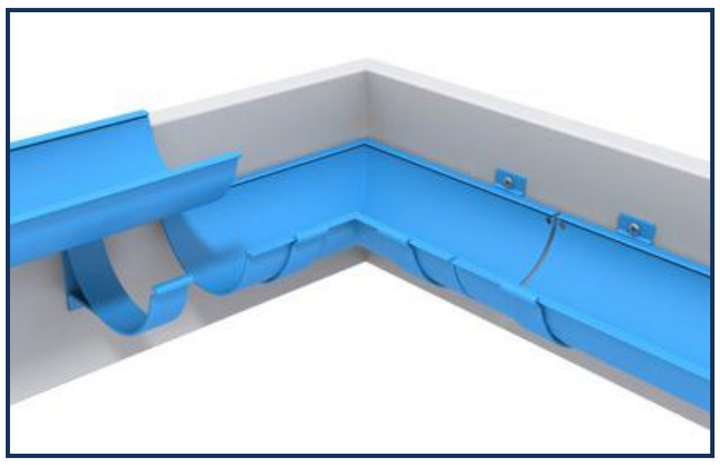

4) Offer angle pieces and outlets to the fascia. Lower gutter sections onto brackets leaving a 4mm expansion gap between gutter sections and allow enough clearance for the gutter joint before clipping gutter into brackets.

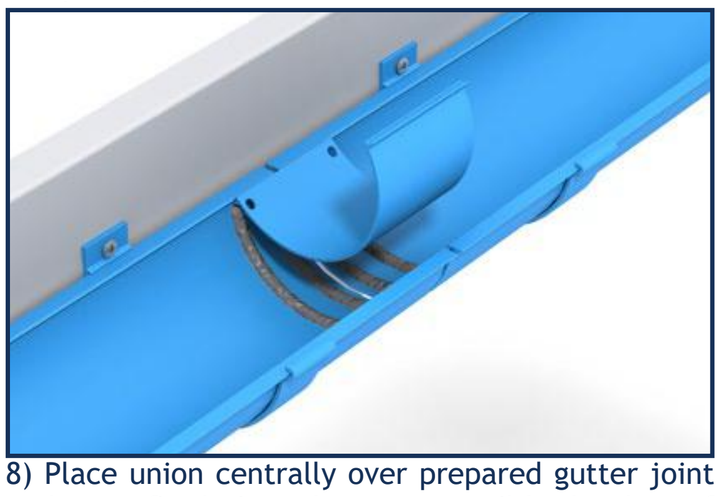

8) Place union centrally over prepared gutter joint and press firmly into the gutter until both edges of the union have engaged with gutter and union is secure. Excessive sealant will increase the force required to engage the union into the gutter.

Gutter Jointing
Joint sealing must not be carried out in wet weather or in temperatures below 5°C or above 40°C. Do not allow sealant applied to gutter joints to skin over or cure (>5 mins) before fitting unions or stop ends.

Testing
It is good practice to test the completed rainwater system once the sealant has been allowed to fully cure. Discharging a garden hose pipe at normal mains pressure into the gutter system at a point furthest from outlet should identify any leaks within the gutter or downpipe. Leaking joints should be taken apart, re-sealed and re-tested.

Handling & Storage
Gutters and Down pipes should be handled and stored with care to avoid scratches, chips and denting to the product and finishes. Cover product with tarpaulin If stored outside, prolonged exposure to direct Sun and or moisture whilst product is packaged in polyurethane can cause permanent staining/marking of finishes.

Sealants must be kept away from direct heat sources and not stored in temperatures below 0°C. Do not use sealant that has passed its shelf life/use by date.

Environmental
Ensure all packaging and contaminated waste is disposed of responsibly in accordance with current waste disposal regulations. Aluminium is a recyclable material, off cuts should be taken to an appropriate recycling centre.

Safety
Hazards relating to sealant, solvent cleaner and touch up paint are identified on their respective packaging, Coshh sheets are available on request.

Installation - AX SnapFix Moulded Gutters Direct Fix

Contents

AX SnapFix Moulded extruded aluminium gutter profiles, jointed with internal union clips. AX SnapFix profiles can be connected to aluminium pipework systems in either round, square or rectangular sections. AX SnapFix Moulded gutter can be installed by direct fix to the fascia, or by means of support brackets. Assembly and installation must be considered with specific reference to site fixing conditions, but general aspects of preparation are shown. This guide covers direct fixing. For bracket fixing, see separate installation guide.

General Fixing Instructions

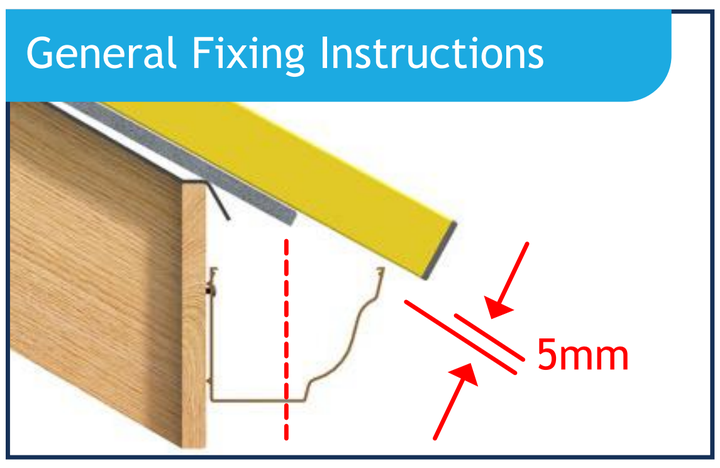

1) Using a straight edge, shim gutters with 5mm clearance so that the last roof tile or slate will align with the midpoint of the gutter.

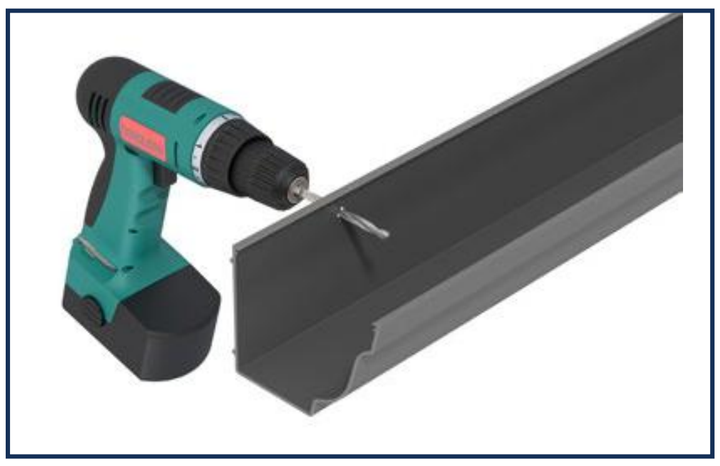

2) Drill Ø8mm holes, 18mm from the top edge of the gutter at 900mm centres and a minimum of 50mm from the ends of the gutter

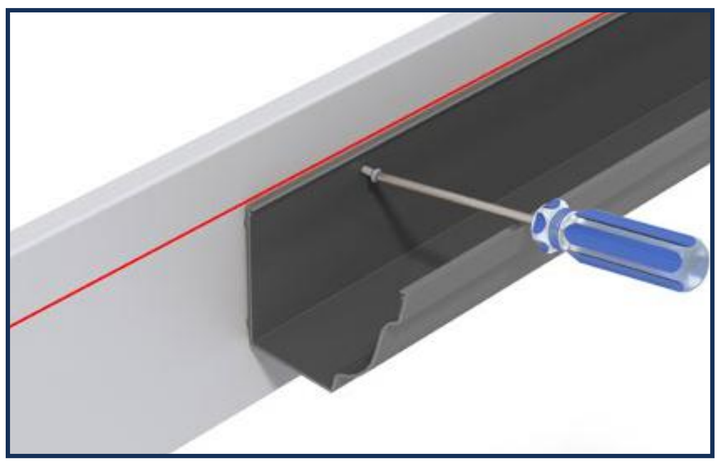

3) Using a string or laser to establish a true line and level of the gutter. Prepare to use packing pieces under gutter lengths where there are depressions in the fascia. Fix Gutters with No 12 x 38mm round-head screws.

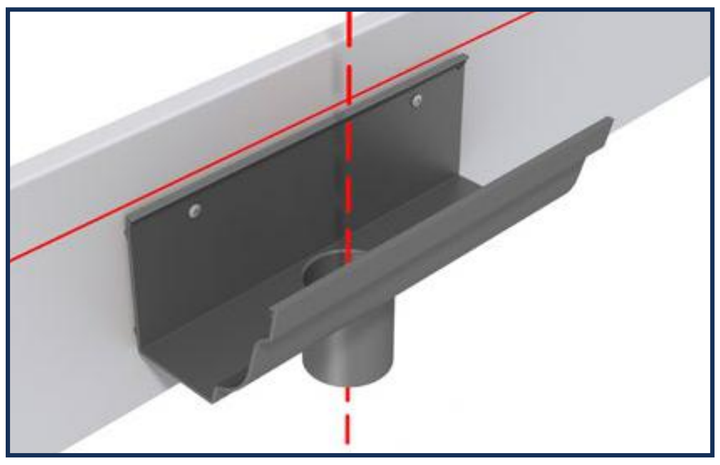

4) Plumb line outlet positions with gullies at ground level.

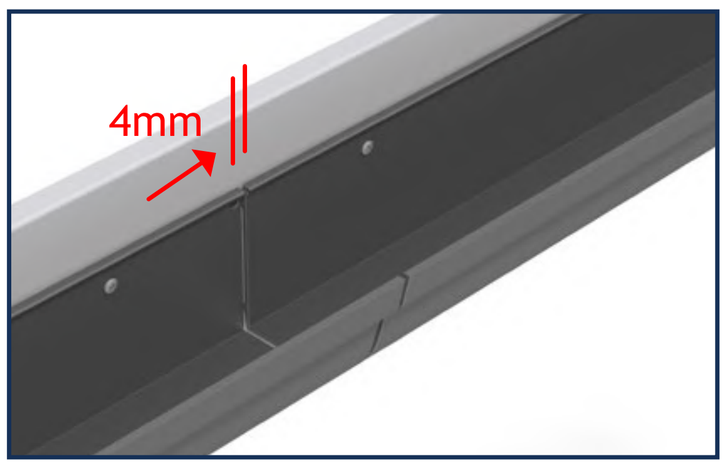

5) When joining gutter lengths, allow for a 4mm expansion gap.

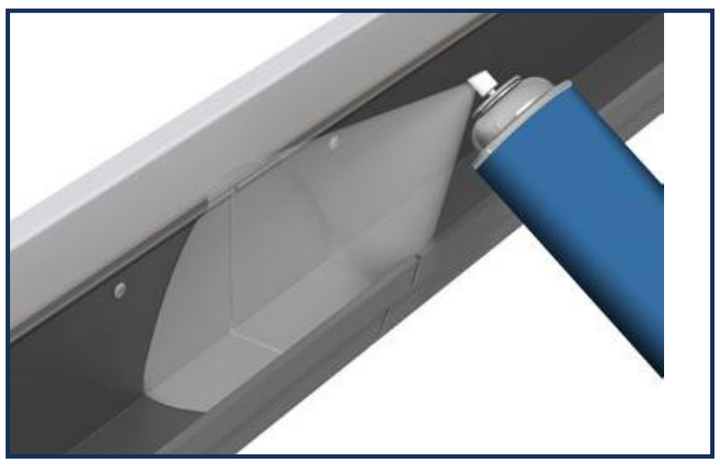

6) De-grease and clean each union and gutter length/fitting to 50-100mm from the end.

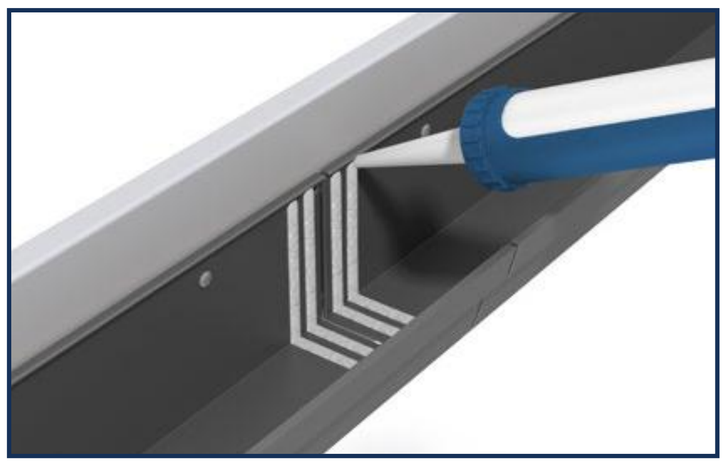

7) Apply two 4-6mm beads of Dow Corning 791 low-modulus Type A silicone sealant to ends of gutter profile and around/over fixing holes. Silicone sealant must be applied only to completely dry surfaces.

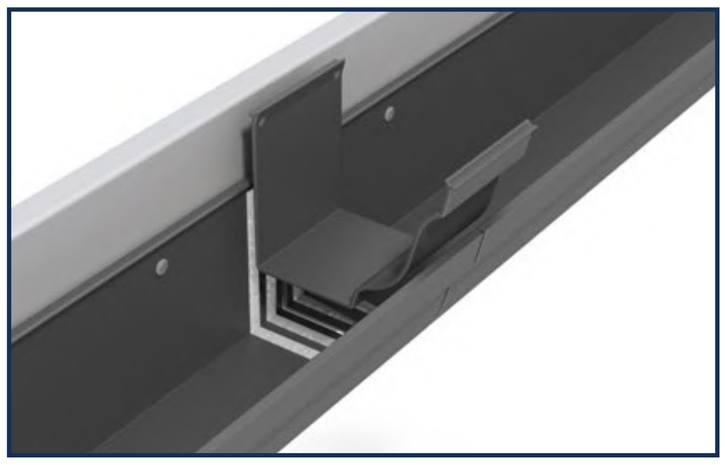

8) Place union centrally over prepared gutter joint and press firmly into the gutter until both edges of the union have engaged with gutter and union is secure. Excessive sealant will increase the force required to engage the union into the gutter.

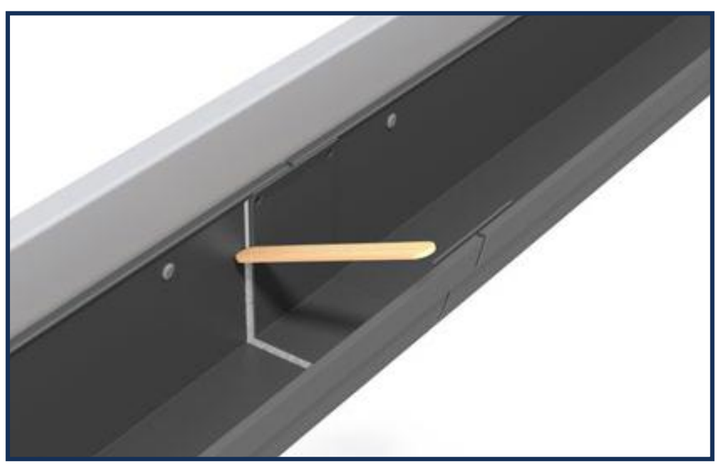

9) Tool-off displaced silicone sealant from the newly formed gutter joint. Allow to cure for 24 hours

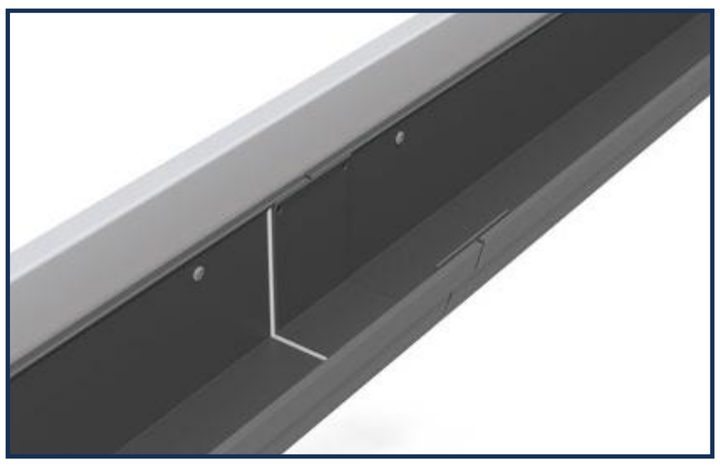

Gutter Jointing
Joint sealing must not be carried out in wet weather or in temperatures below 5°C or above 40°C. Do not allow sealant applied to gutter joints to skin over or cure (>5 mins) before fitting unions or stop ends.

Testing
It is good practice to test the completed rainwater system once the sealant has been allowed to fully cure. Discharging a garden hose pipe at normal mains pressure into the gutter system at a point furthest from outlet should identify any leaks within the gutter or downpipe. Leaking joints should be taken apart, re-sealed and re-tested.

Handling & Storage
Gutters and Down pipes should be handled and stored with care to avoid scratches, chips and denting to the product and finishes. Cover product with tarpaulin If stored outside, prolonged exposure to direct Sun and or moisture whilst product is packaged in polyurethane can cause permanent staining/ marking of
finishes.

Sealants must be kept away from direct heat sources and not stored in temperatures below 0°C. Do not use sealant that has passed its shelf life/use by date.

Environmental
Ensure all packaging and contaminated waste is disposed of responsibly in accordance with current waste disposal regulations. Aluminium is a recyclable material, off cuts should be taken to an appropriate recycling centre.

Safety
Hazards relating to sealant, solvent cleaner and touch up paint are identified on their respective packaging, Coshh sheets are available on request.

Installation - AX Moulded Gutters Direct Fix

Contents

AX Moulded gutters comprise extruded aluminium profiles, jointed with internal union clips. Profiles can be connected to aluminium pipework systems in either round, square or rectangular sections. AX Moulded gutters can be installed by direct fix to the fascia, or by means of support brackets. Assembly and installation must be considered with specific reference to site fixing conditions, but general aspects of preparation are shown below. This guide covers direct fixing. For bracket fixing, see separate installation guide.

General fixing instructions

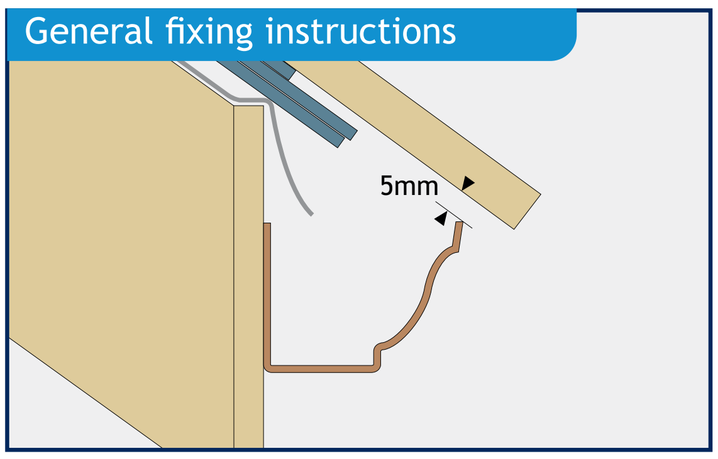

1. Using a straight edge or ruler, shim gutter brackets with 5mm clearance so that the last roof tile or slate will align with the mid point of the gutter.

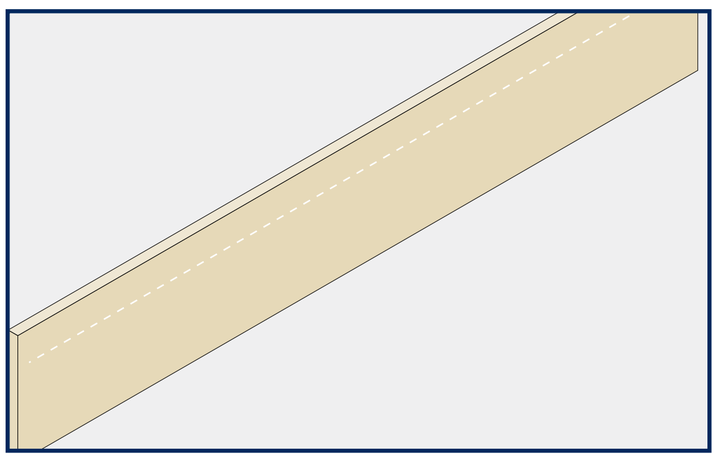

2. Using a string or laser, establish a true line of the gutter.

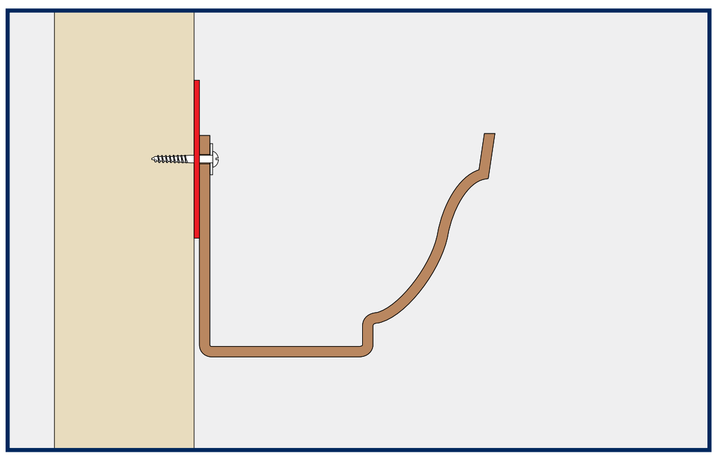

3. Note any uneven surfaces on the fascia and make adjustments if possible. Where shallow depressions occur, packing pieces can be used under gutter lengths.

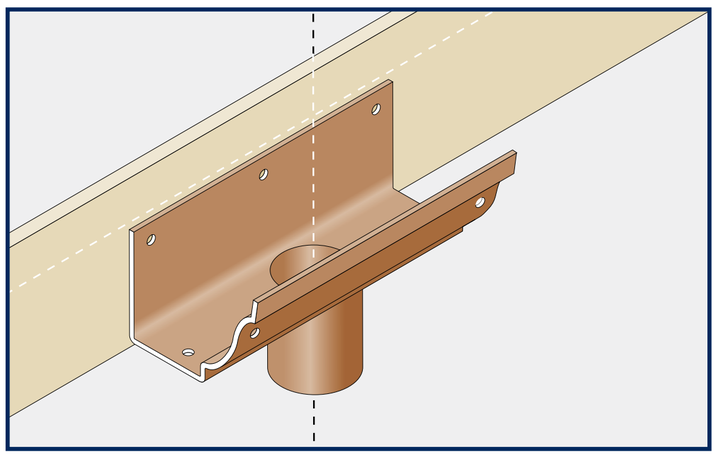

4. Plumb line outlet positions with gullies at ground level

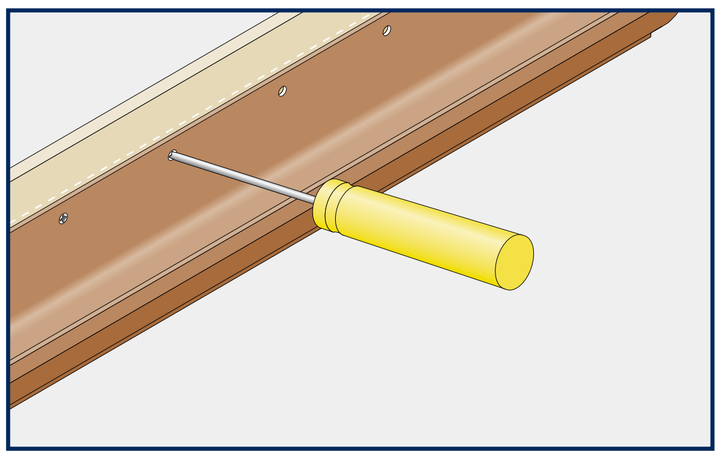

5. Fix all components and gutter lengths direct to the fascia with a single round-head screw through the back edge at 900mm centres. Drill 8mm holes 18mm from the top edge.

Method of jointing

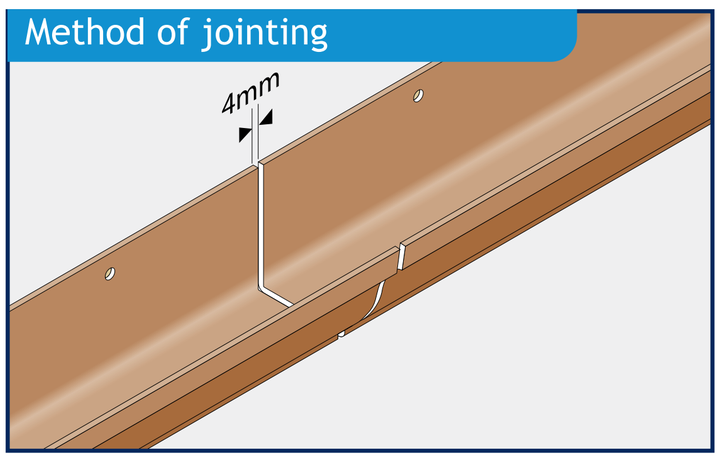

6. When joining gutter lengths, allow for a 4mm expansion gap.

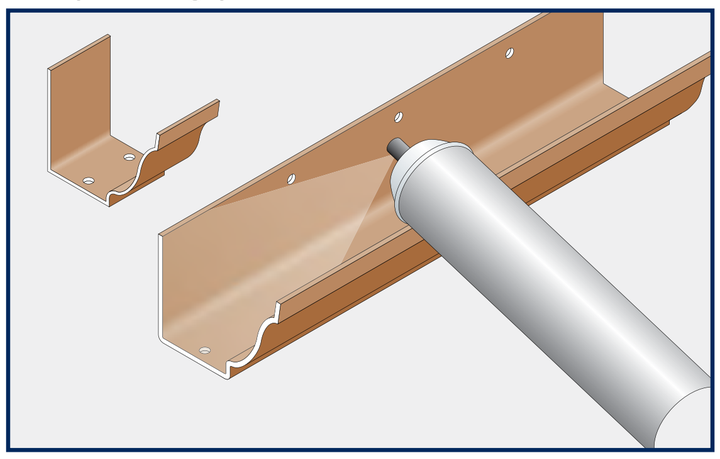

7. De-grease and clean each union and gutter length/fitting to a distance of 50mm - 100mm from the end.

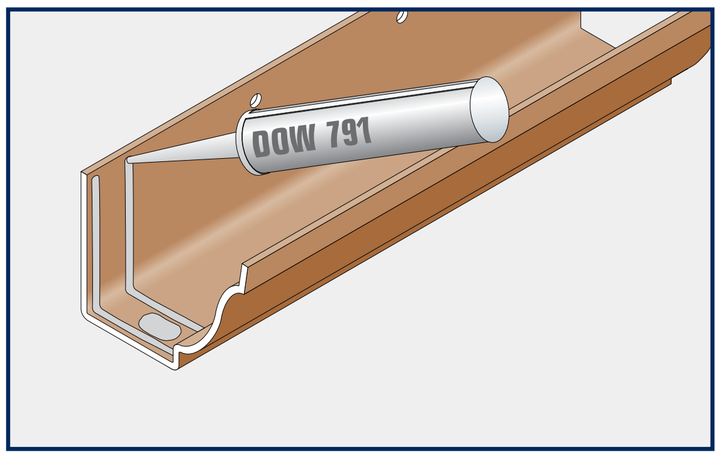

8. Apply two 6mm beads of Dow Corning 791 low-modulus Type A silicone sealant either side of, and around the fixing holes. Silicone sealant must be applied only to completely dry surfaces.

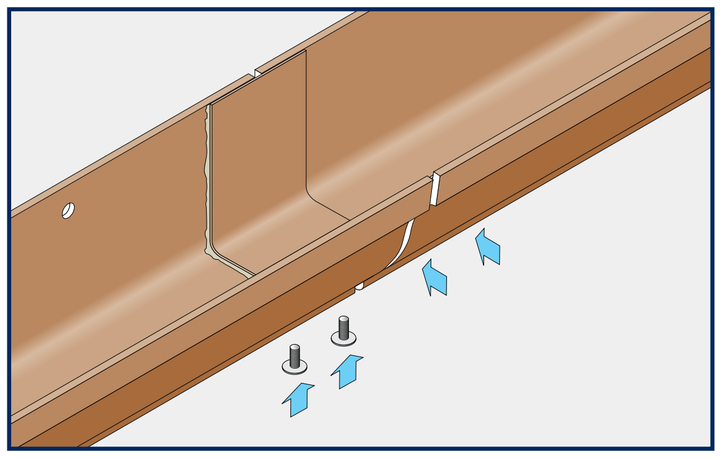

9. Secure the union to the gutter using the M6 x 20mm aluminium nuts, bolts and washers supplied. Pass bolt from outside in, and use washer and nut to secure finger-tight.

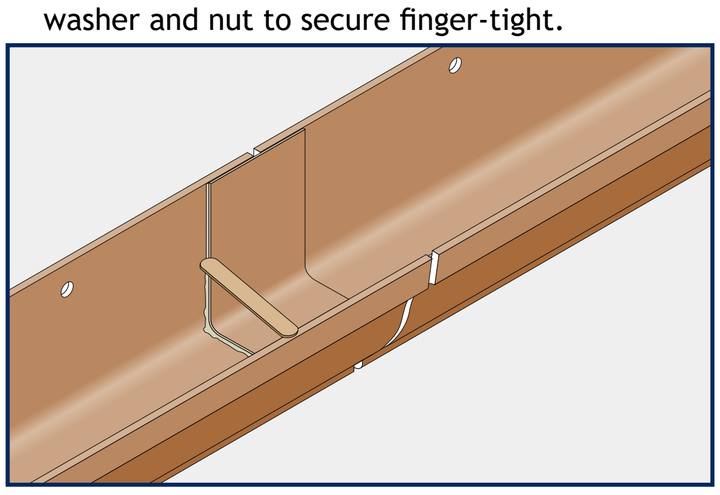

10. Tool-off displaced silicone sealant to the inside of the gutter joint. Tighten fixing bolts. Cone-off bolts and any other potential leakage points with sealant. Allow to cure for 24 hours.

Finishing

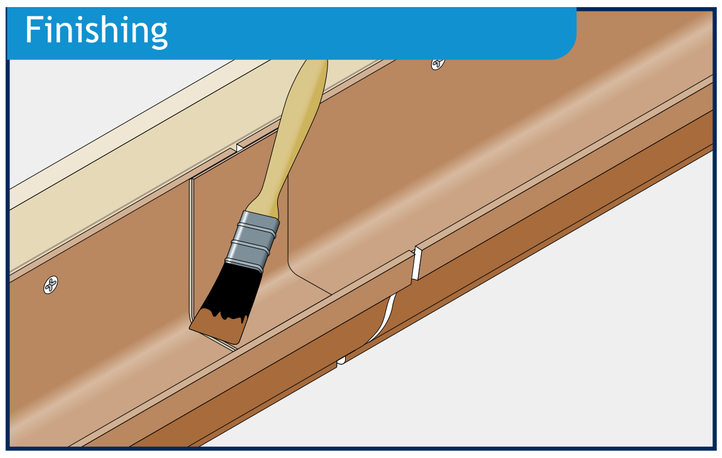

11. Use touch-up paint on all exposed nuts, bolts and washers.

Installation - AX Half Round Bracket Fixing

Contents

AX Half Round gutters comprise extruded aluminium profiles, jointed with internal union clips. A range of brackets is available to accommodate all types of eaves condition. AX profiles can be connected to aluminium pipework systems in either round, square or rectangular sections secured by standard or offset brackets.

General fixing instructions

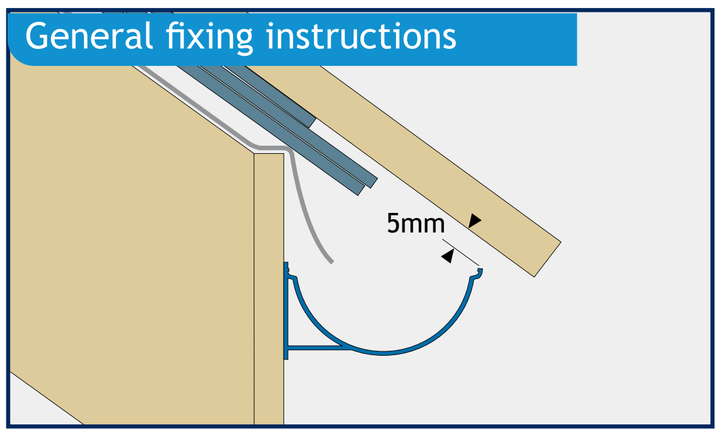

1. Using a straight edge or ruler, shim gutter brackets with 5mm clearance so that the last roof tile or slate will align with the mid point of the gutter.

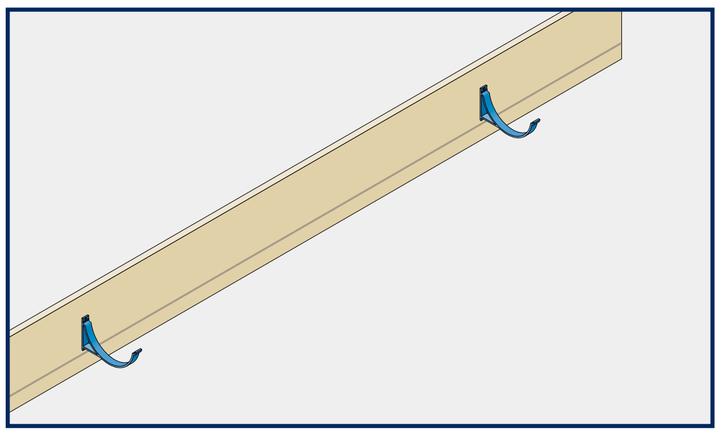

2. Use a string or laser to establish a true line and level of the gutter. Prepare to use packing pieces under brackets where there are depressions.

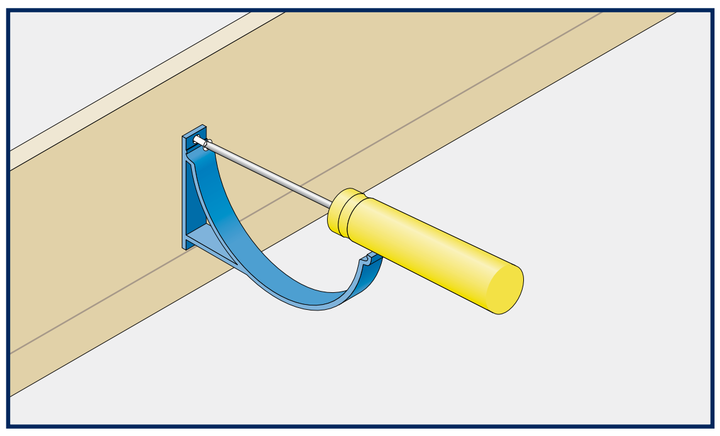

3. Generally position fascia brackets at 900mm centres in accordance with BS EN 12056-3:2000. Fix brackets with two No 12 x 38mm round-head screws.

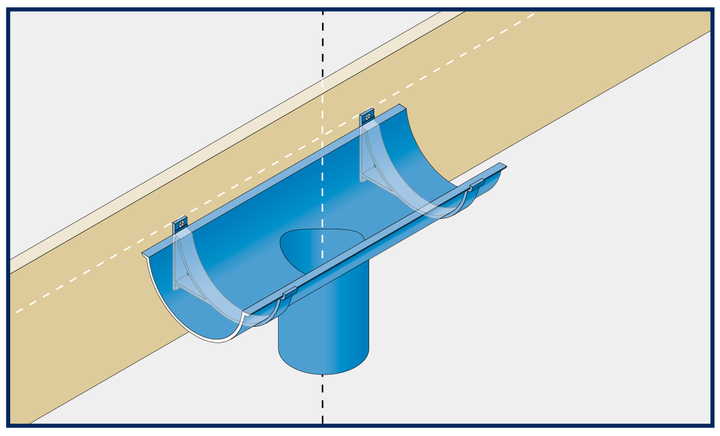

4. Plumb line outlet positions with gullies at ground level.

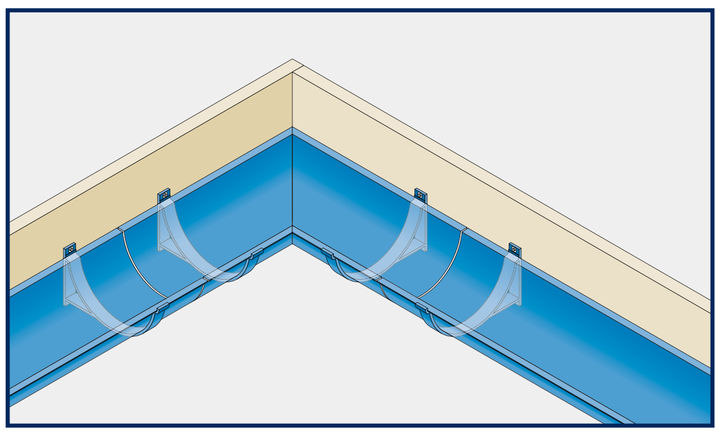

5. Offer angle pieces and outlets to the fascia. Lower gutter sections onto the brackets leaving a 4mm expansion gap between gutter sections and allow sufficient clearance for the gutter joint.

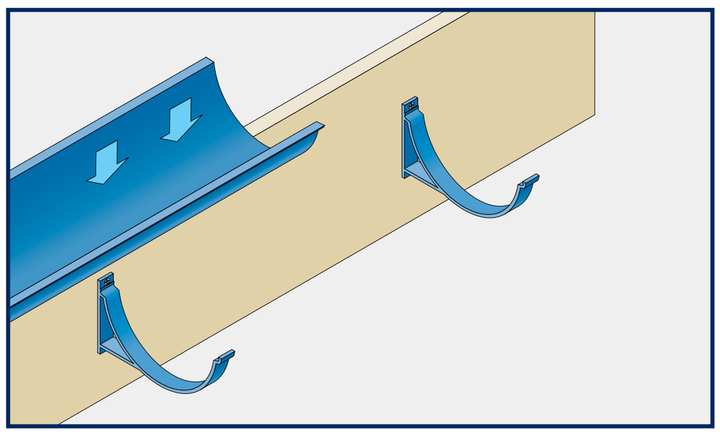

6. Clip gutter sections into brackets.

Method of jointing

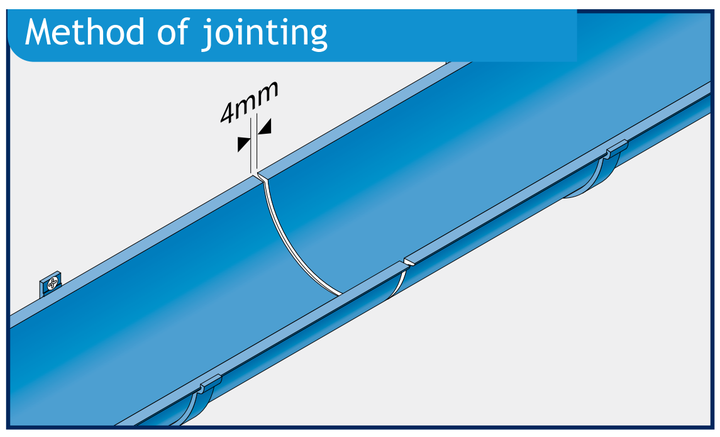

7. When joining gutter lengths, allow for a 4mm expansion gap.

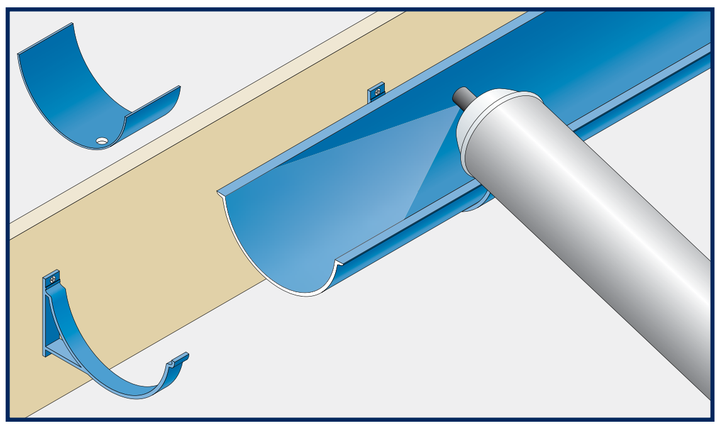

8. De-grease and clean each union and gutter length/fitting to a distance of 50 - 100mm from the end.

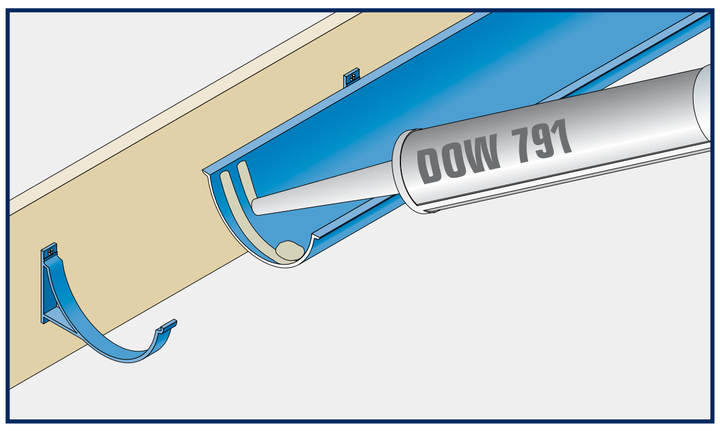

9. Apply two 6mm beads of Dow Corning 791 low-modulus Type A silicone sealant to the ends of gutter profiles and fixing hole. Silicone sealant must be applied only to completely dry surfaces.

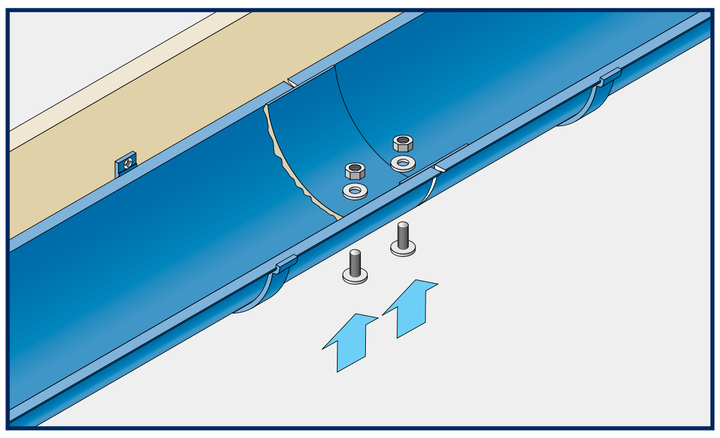

10. Secure the union to the gutter using the M6 x 12mm aluminium nuts, bolts and washers supplied. Pass bolt from outside in, and use washer and nut to secure finger-tight.

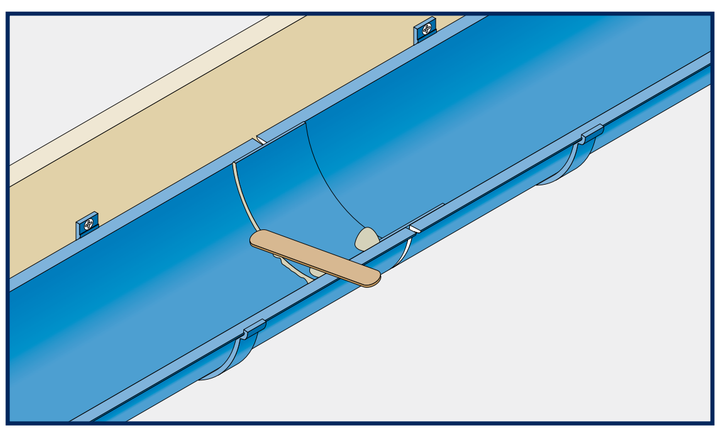

11. Tool-off displaced silicone sealant to the inside of the gutter joint. Tighten fixing bolts. Cone-off bolts and any other potential leakage points with sealant. Allow to cure for 24 hours.

Finishing

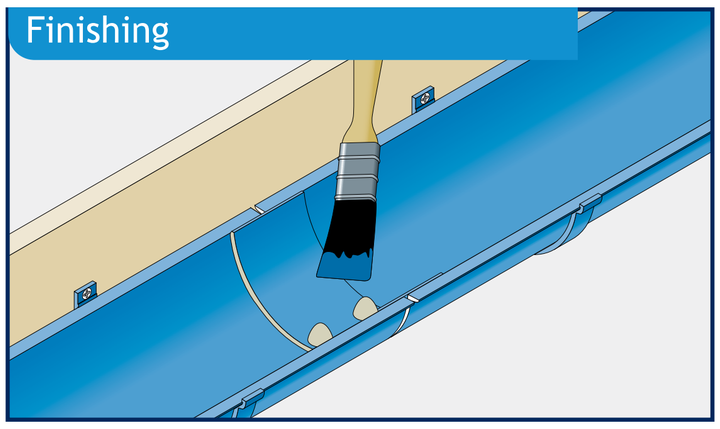

12. Use touch-up paint on all exposed nuts, bolts and washers.

Installation - GX Gutter Preparation

The GX range consists of three gutter profiles designed for managing high volumes of rainwater. GX gutters use traditional wet jointing on site, concealed internal laps and profile specific bracketry for support. High capacity GX systems require the strength and support of internal top straps or “back fixing” directly to fascia boards. Installers should inspect fascia boards to ensure they are capable of carrying the full gutter load.

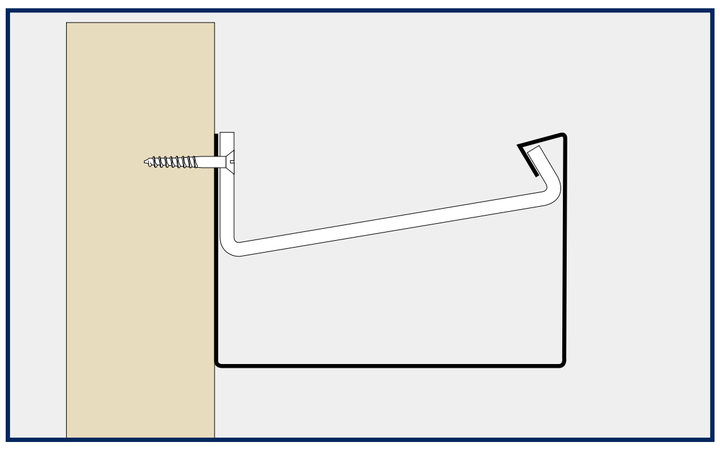

GX Joggle (GXJ)

Screw fixes to the fascia incorporating a heavy gauge top strap.

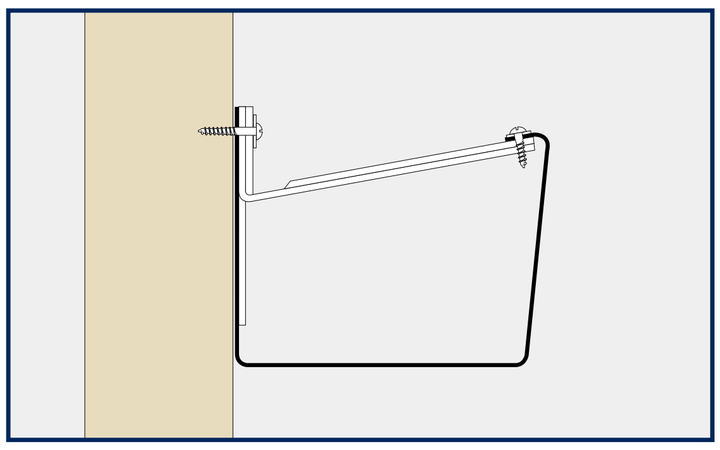

GX Smooth (GXS)

Fascia fixed using a one piece combined top and back strap.

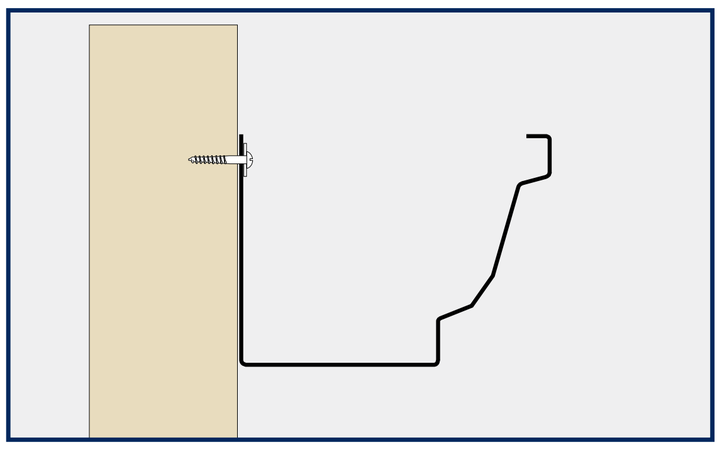

GX Moulded (GXM)

Direct back fix system with option for top strap where large sizes and heavy loads are anticipated.

Setting Out

Follow the guidelines below for setting out:

- GX Joggle – GXJ1, GXJ2, GXJ3 – Fix at 1000mm centres, GXJ4 and GXJ5 – Fix at 600mm centres using pre-drilled holes provided
- GX Smooth – Fix at 1000mm centres using pre-drilled holes provided
- GX Moulded – Fix at 600mm centres using pre-drilled holes provided
- 2no fixings per angle
- 1no fixing per running outlet

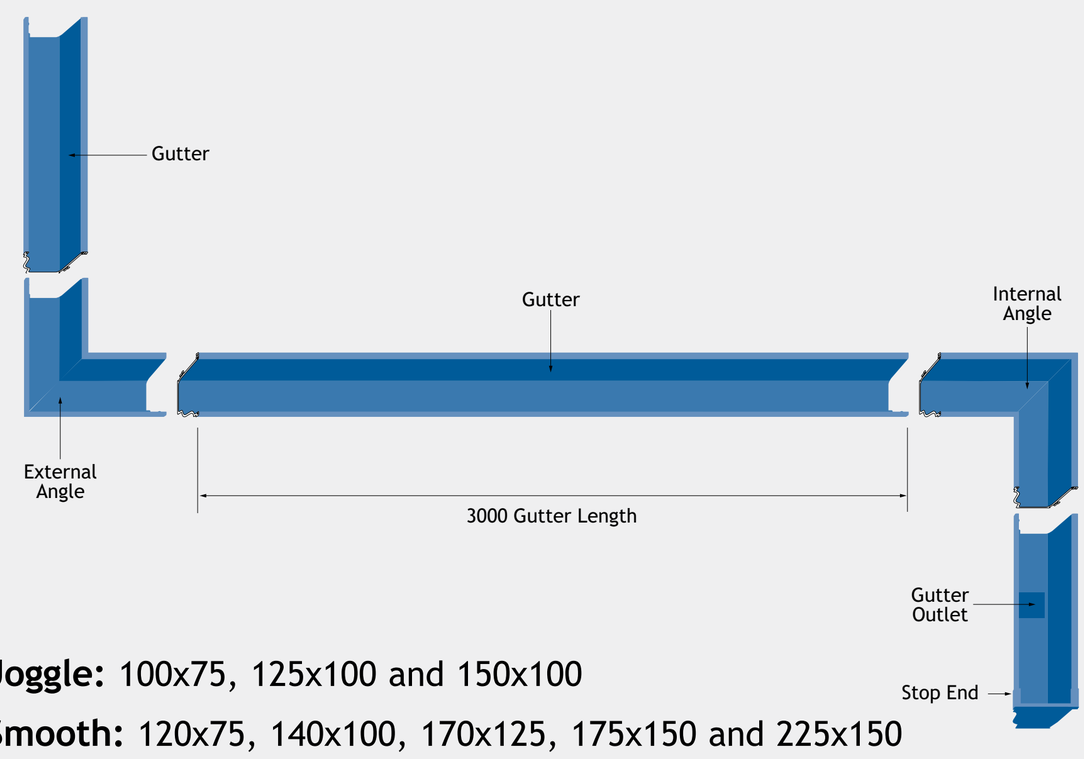

GX Joggle: 100x75, 125x100 and 150x100

GX Smooth: 120x75, 140x100, 170x125, 175x150 and 225x150

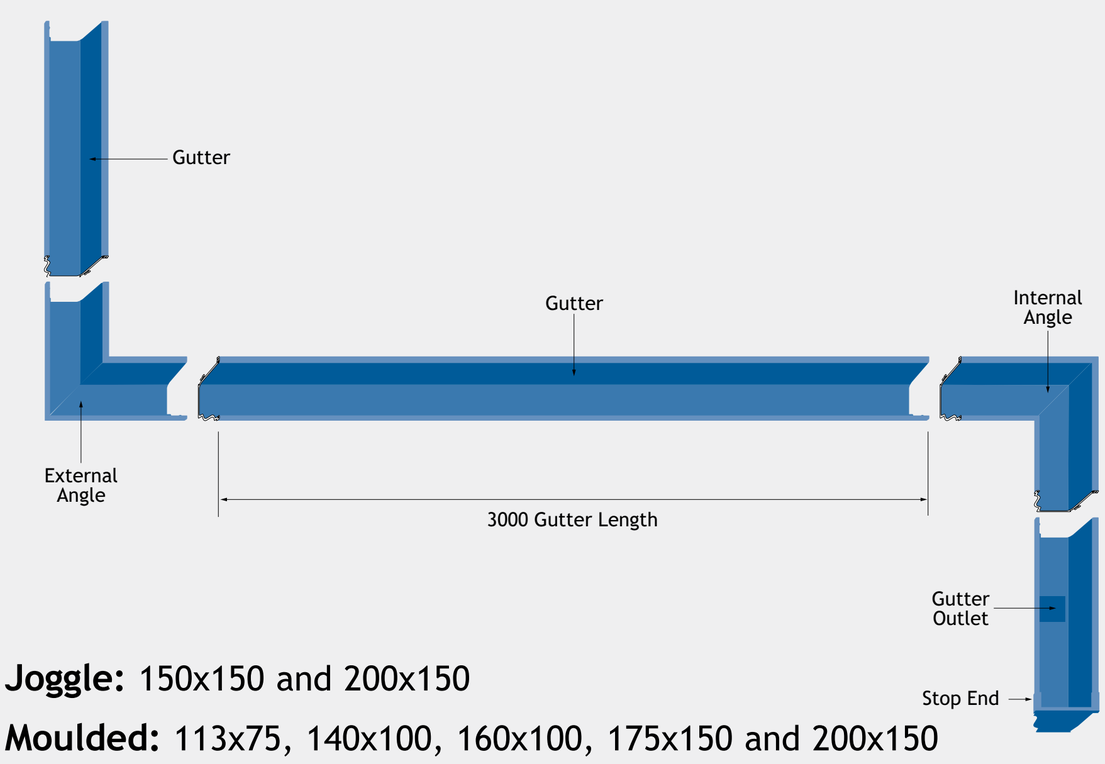

GX Joggle: 150x150 and 200x150

GX Moulded: 113x75, 140x100, 160x100, 175x150 and 200x150

Installation - GX Joggle Gutter

Contents

GX Joggle gutters are a press formed eaves drainage system with sharply defined box profile. Gutters are supported by internal top straps and directly fixed to the fascia board. The Joggle method of gutter jointing uses an integral internal union or formed spigot which is wet sealed using silicone sealant.

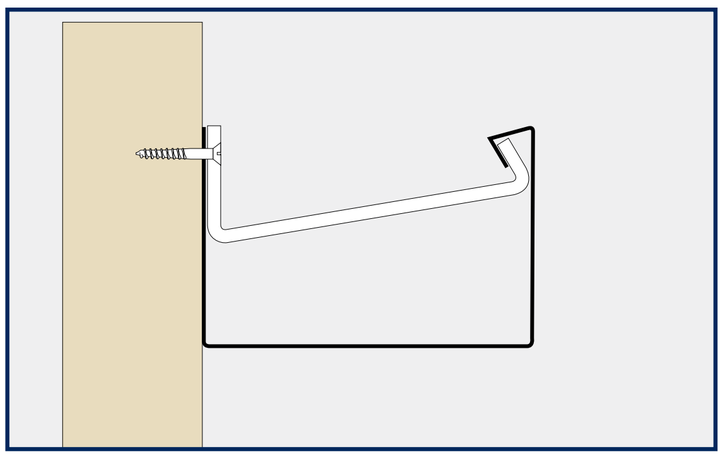

GX Joggle fixes to fascia using a heavy gauge top strap.

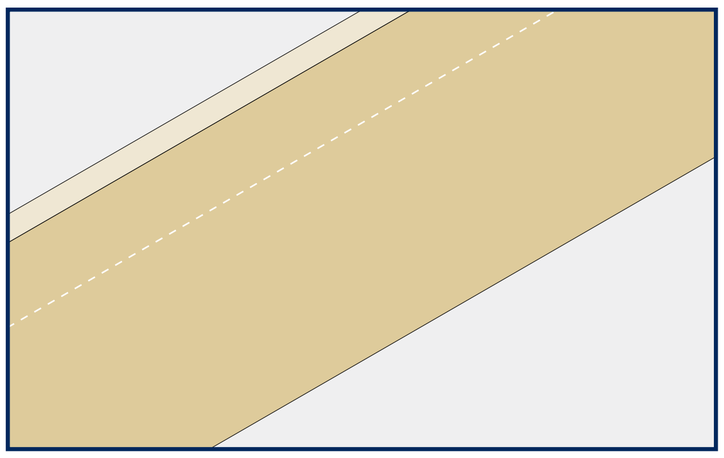

1. Use a string line or laser to set out gutter lines. (GX Joggle must be laid level).

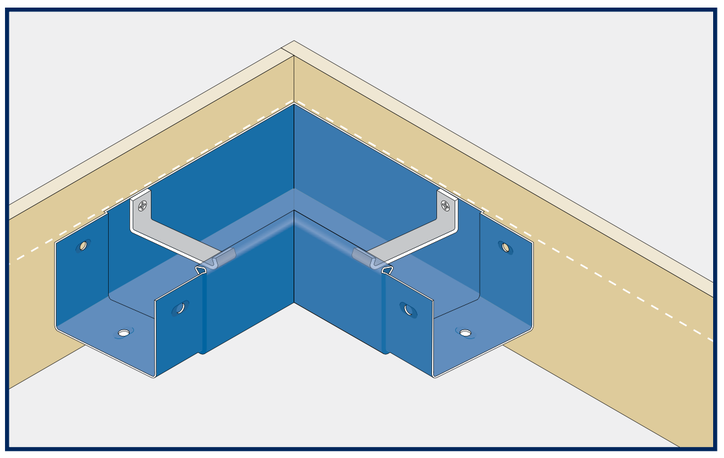

2. Position angles, mark fixing positions and pilot 3.5mm diameter holes, fit top strap and loosely fix using No12 x 38mm roundhead screws.

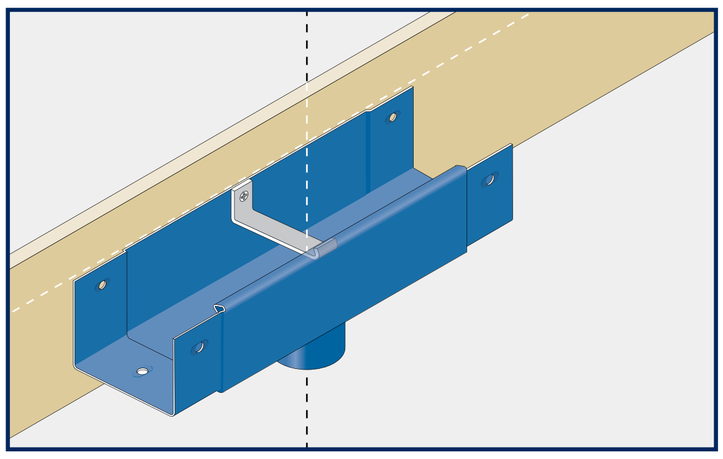

3. Plumb line outlet position with gullies at ground level, pilot 3.5mm diameter holes, fit top strap and loosely fix using No12 x 38mm roundhead screws.

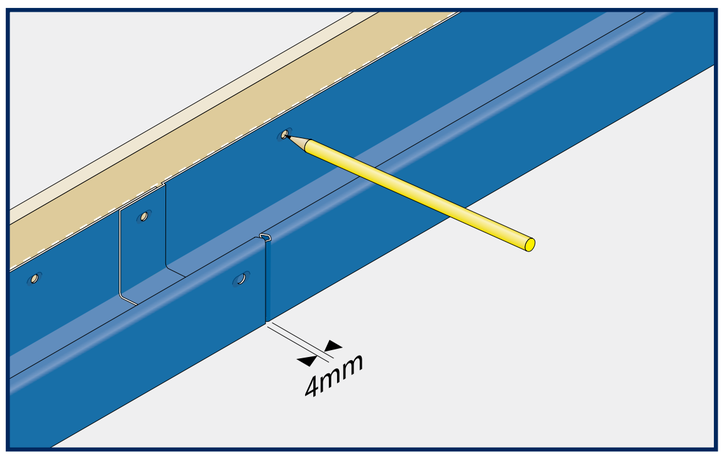

4. Position gutter lengths allowing for 4mm expansion joints. Mark fixing positions and pilot 3.5mm diameter holes.

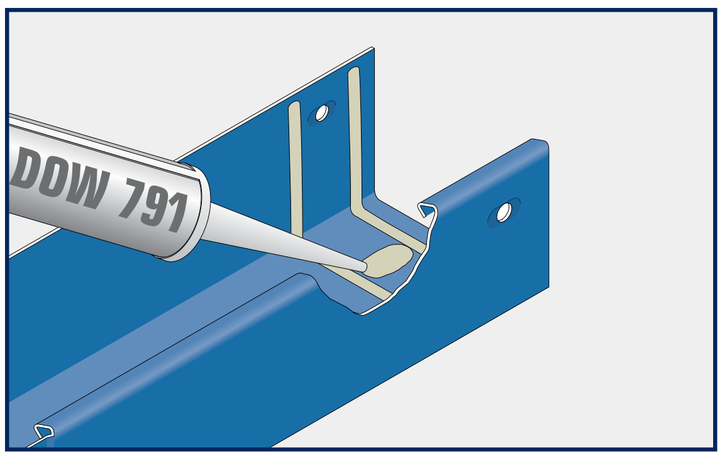

5. Thoroughly degrease all jointing surfaces and apply two 6mm beads of DOW 791 silicone sealant either side of and around the slotted fixing holes.

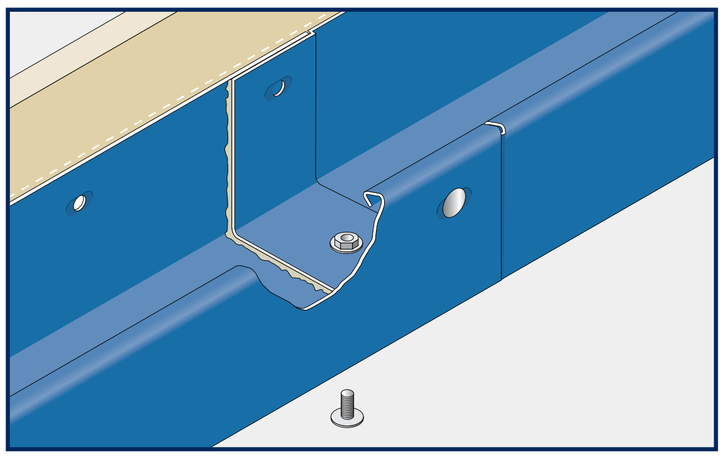

6. Secure joints with aluminium M6 x 12mm nuts, bolts and washers provided taking care not to over tighten or displace sealant from within the joint.

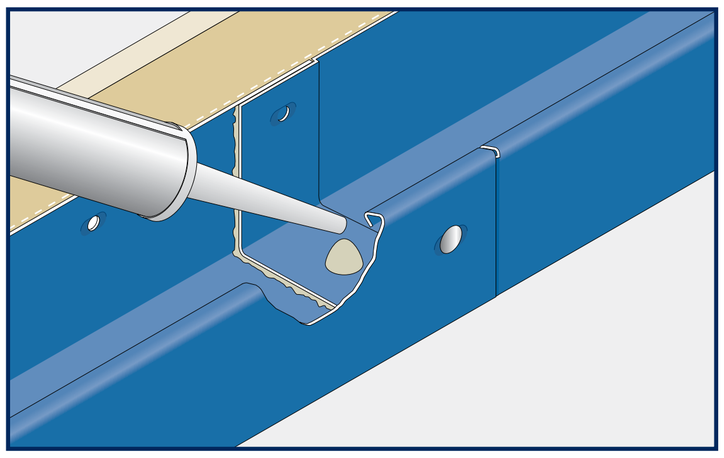

7. Cone-off the exposed bolts, studs and nuts inside the gutter with a generous application of silicone sealant.

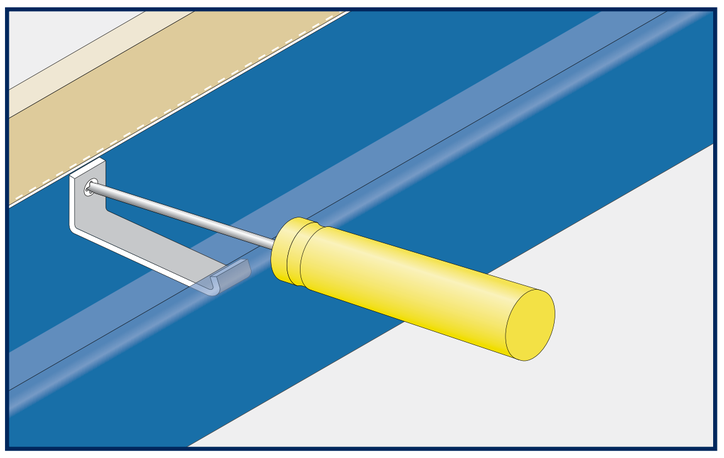

8. Align gutter lengths correctly for final positioning. Engage top straps and fix back securely to fascia.

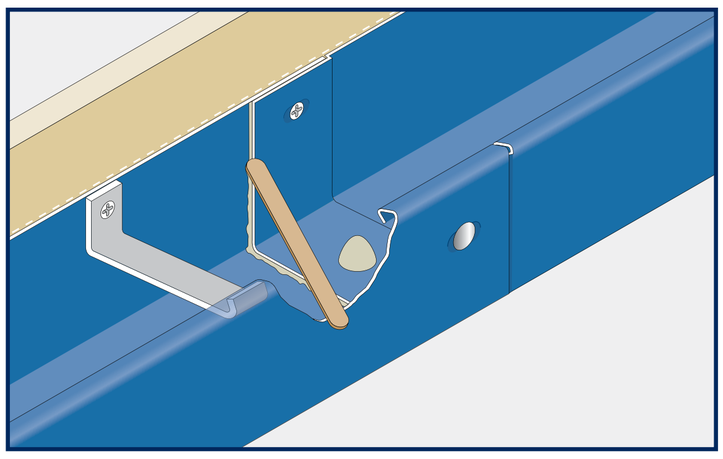

9. Tool off excess silicone around the union joint and from visible external surfaces.

Installation - GX Smooth Gutter

Contents

GX Smooth is a press formed rectangular profile with inclined front face. Gutters are supported using a one piece top strap combined with a back strap to accommodate increased weight load. Gutters and fittings are butt jointed with an overlapping union which is wet sealed using silicone sealant and back fixed to the fascia.

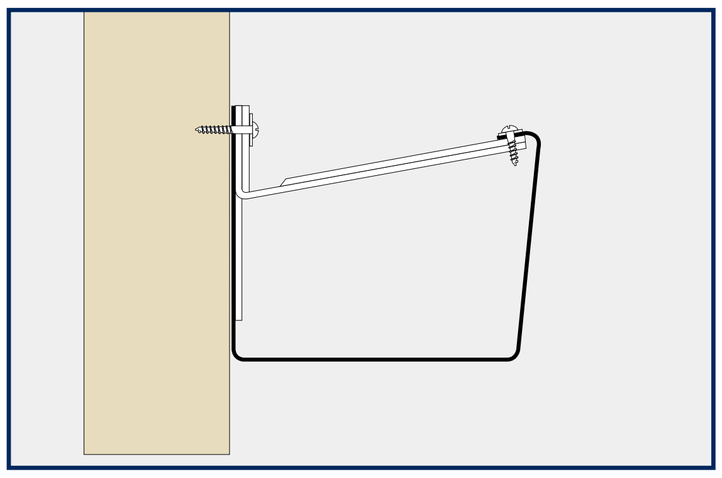

GX Smooth fixes using a one piece combined top and back strap.

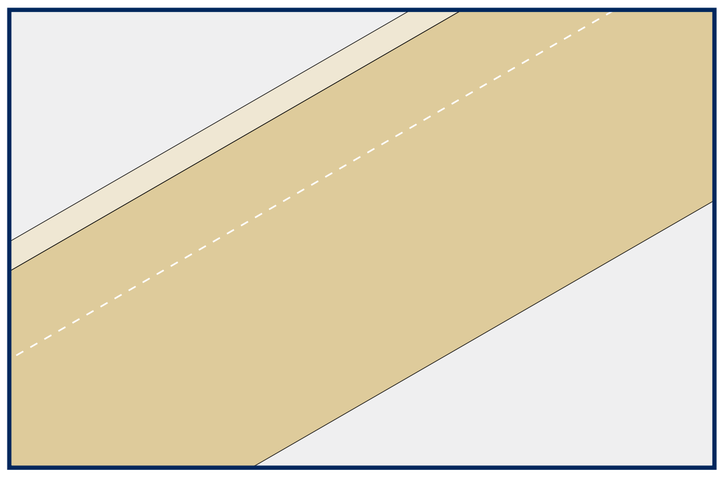

1. Use a string line or laser to set out gutter lines. (GX Smooth must be laid level).

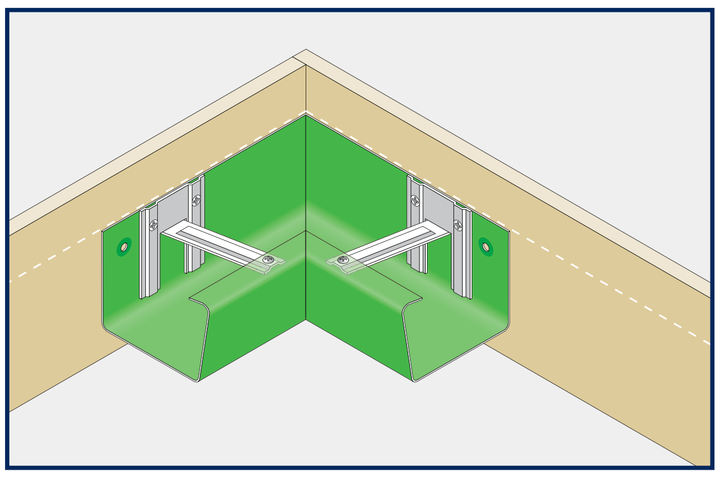

2. Position angles, mark fixing positions and pilot 3.5mm diameter holes. Loosely fit using No12 x 38mm round head wood screws and washers provided.

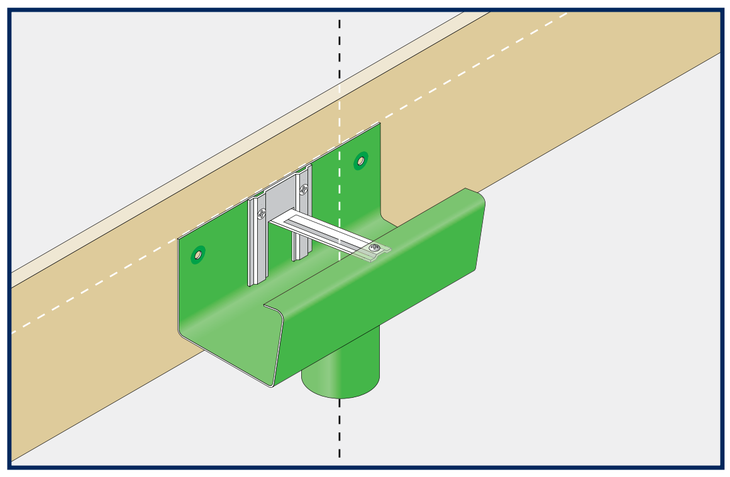

3. Plumb line outlet positions with gullies at ground level and mark fixing positions. Pilot 3.5mm diameter holes and loosely fit using No12 x 38mm round head wood screws and washers.

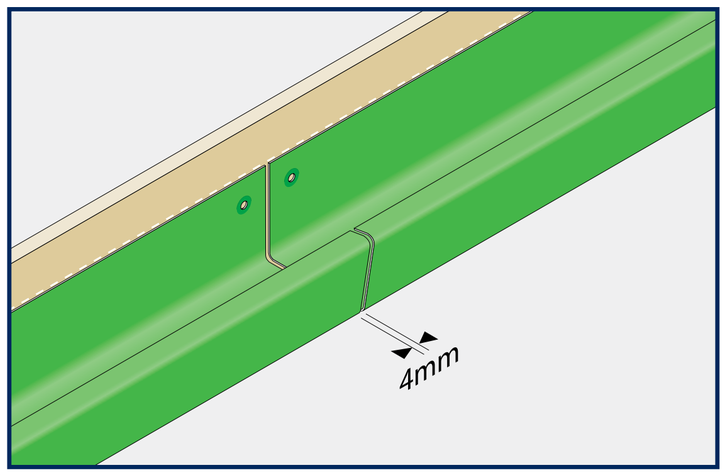

4. Line and level gutter lengths allowing 4mm expansion gap at joints.

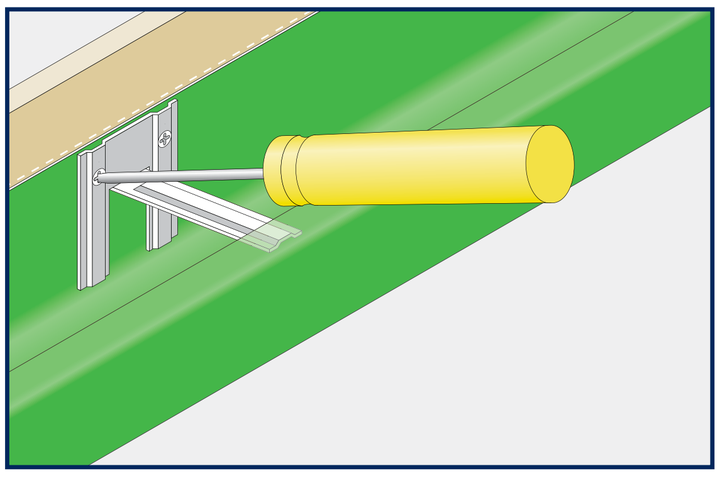

5. Fix gutters to fascia using combined top/back straps and No12 x 38mm round head wood screws and washers provided.

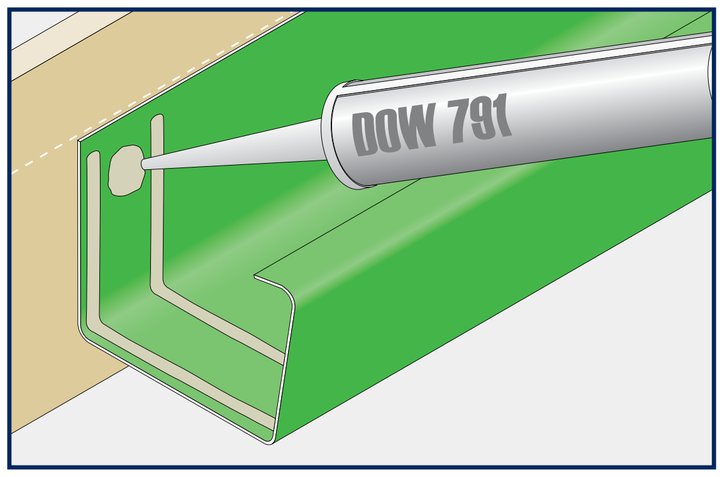

6. Thoroughly degrease all jointing surfaces and apply two 6mm beads of DOW 791 silicone sealant across back/sole/front surfaces.

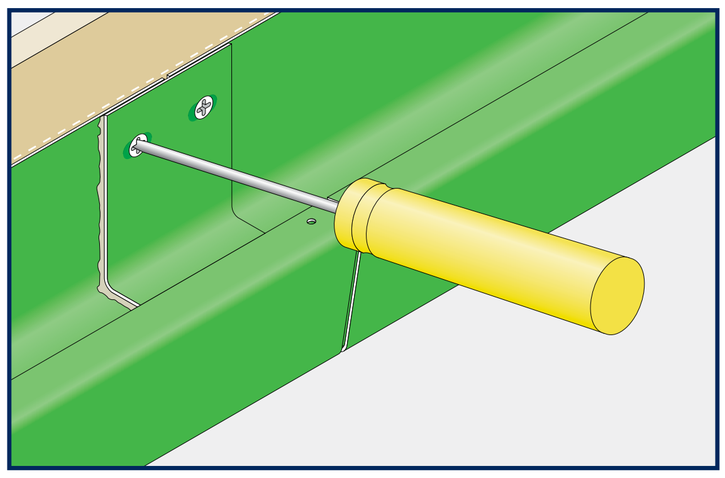

7. Slide in union joints and back fix to fascia board using No12 x 38mm round head wood screws and washers. Slide in next gutter and repeat process.

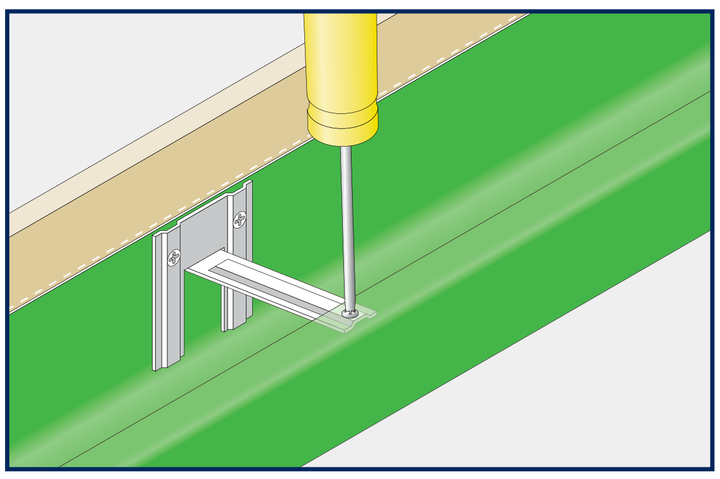

8. Screw the front end of the top straps to the preformed holes in the top lip of the gutter. Use the pan head fixing screw provided.

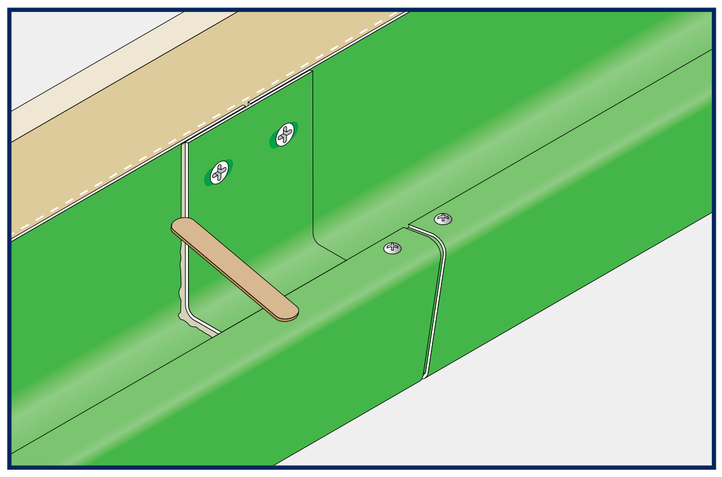

9. Tool off excess silicone around the union joint and from visible external surfaces.

Installation - GX Moulded Gutter

Contents

GX Moulded gutters are press formed to provide a seamless moulded profile. GX Moulded gutter systems are generally back fixed directly to the building fascia although the largest profiles also employ top straps. Gutter lengths and fittings are butt jointed with bolted overlapping unions which are wet sealed using silicone sealant.

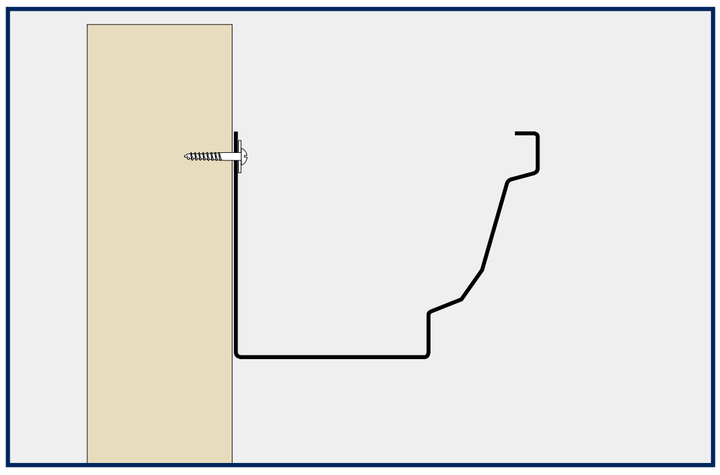

GX Moulded direct fixes to fascia. Top strap options are available where large sizes and heavy loads are anticipated.

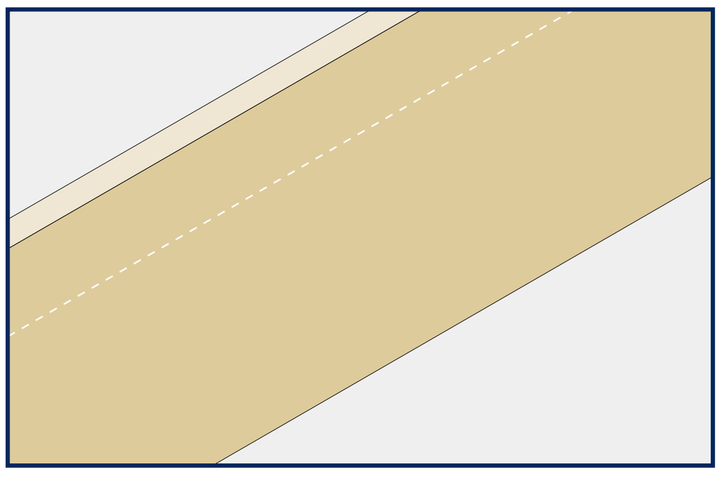

1. Use a string line or laser to set out gutter lines. (GX Moulded must be laid level).

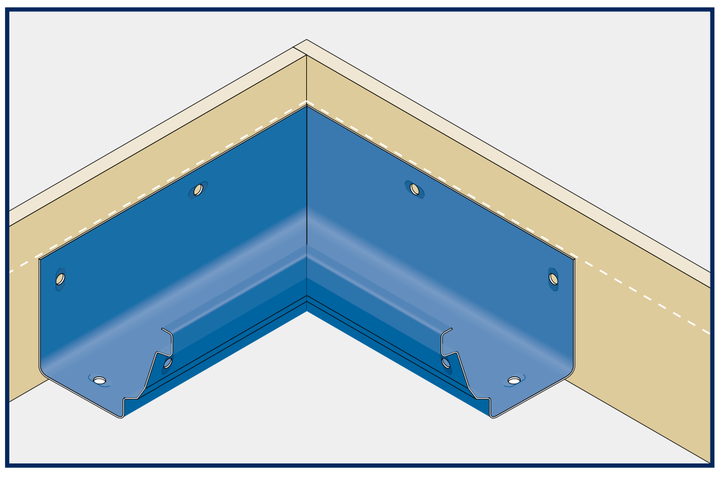

2. Position angles, mark fixing positions and pilot 3.5mm diameter holes and loosely fit using No12 x 38mm round head wood screws and washers provided.

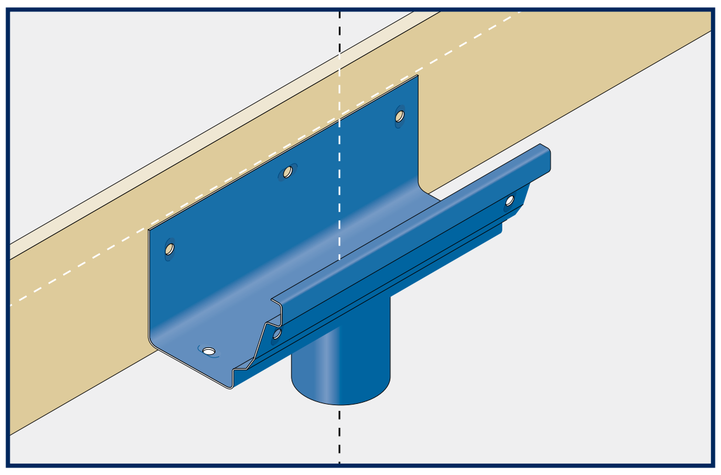

3. Plumb line outlet positions with gullies at ground level and mark fixing positions. Pilot 3.5mm diameter holes and loosely fit using No12 x 38mm round head wood screws and washers provided.

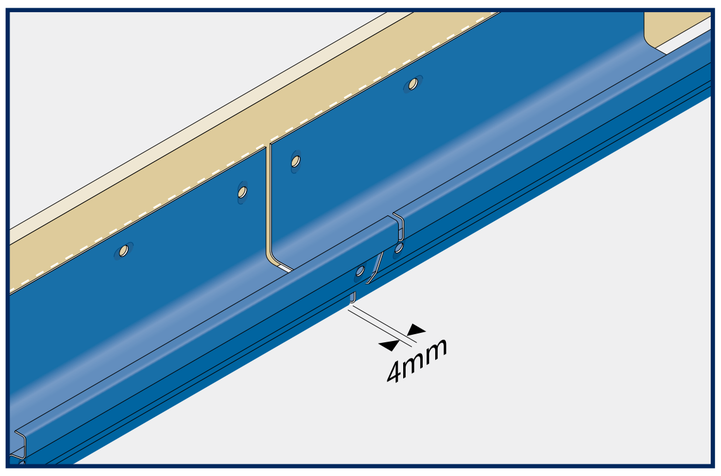

4. Line and level gutter lengths allowing for 4mm expansion gaps at joints.

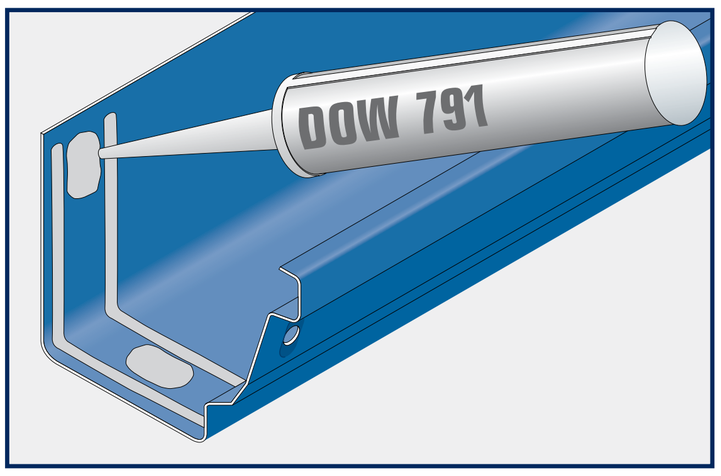

5. Thoroughly degrease all jointing surfaces and apply two 6mm beads of DOW 791 silicone sealant either side of and around the slotted fixing holes to inside back/sole/front surfaces.

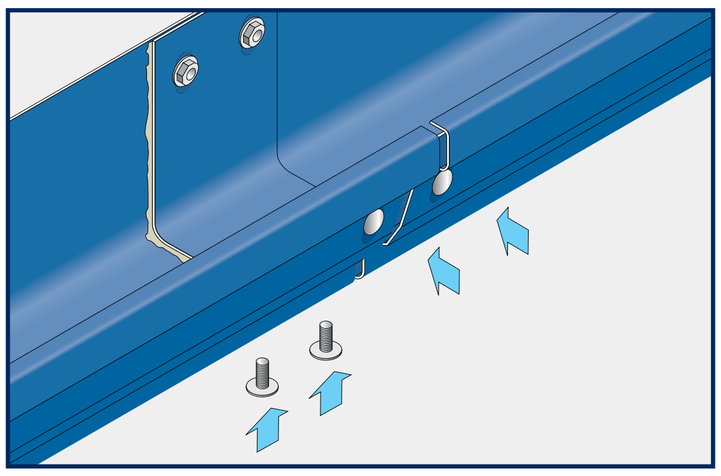

6. Slide in union joint and insert gutter bolts (heads outside). Secure joint with nuts and washers taking care not over tighten or displace sealant from within the joint.

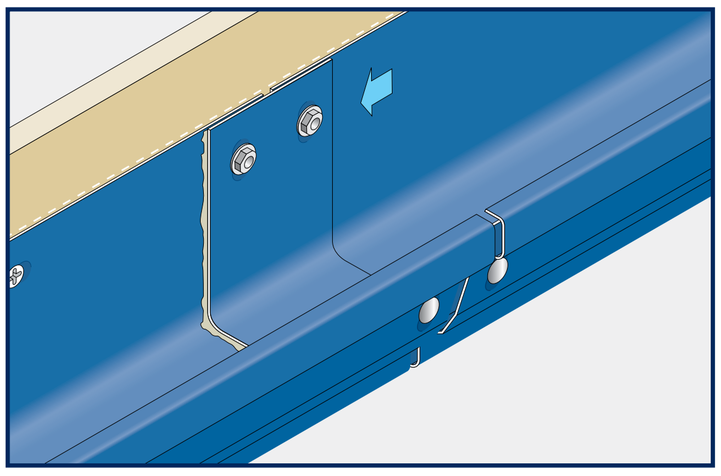

7. Slide in next gutter length and repeat process.

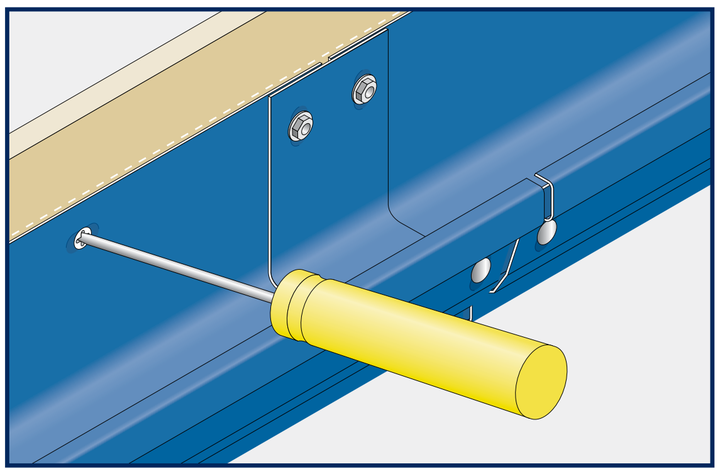

8. Tighten all fascia fixing screws and fit top straps if required otherwise screw back securely to the fascia using No12 x 38mm round head wood screws and washers provided.

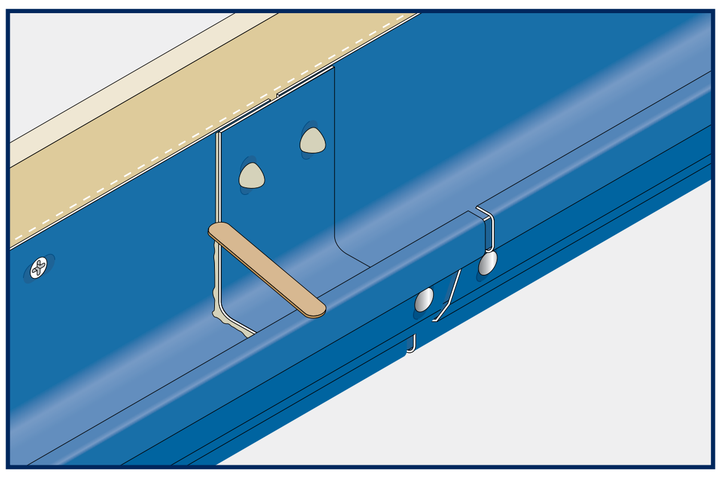

9. Tool off excess silicone and cone-off the exposed washers and nuts inside the gutter with a generous application of silicone sealant.

Installation - Flushjoint Rainwater Pipes

Contents

Flushjoint rainwater pipes consist of circular, square and rectangular pipes with factory fitted internal spigot joints between pipes and fittings. Pipes are bracket fixed and generally assembled from the eaves downward. Loose-fit pipe clips are used to secure Flushjoint pipes and can be positioned to allow pipe joints to be completely concealed.

Pipe Alignment

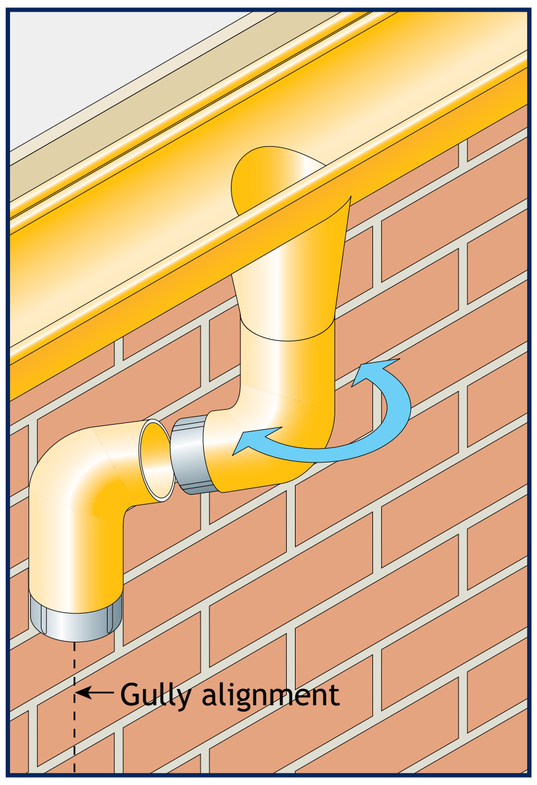

Check alignment of gutter outlet to gully. Where square or rectangular pipes are being installed and offsets are required, alignment between the gutter outlet and gully must be exact.

Round pipe systems are more flexible to install as offsets can be adjusted and "swung" into alignment with the gully position.

Outlets and Offsets

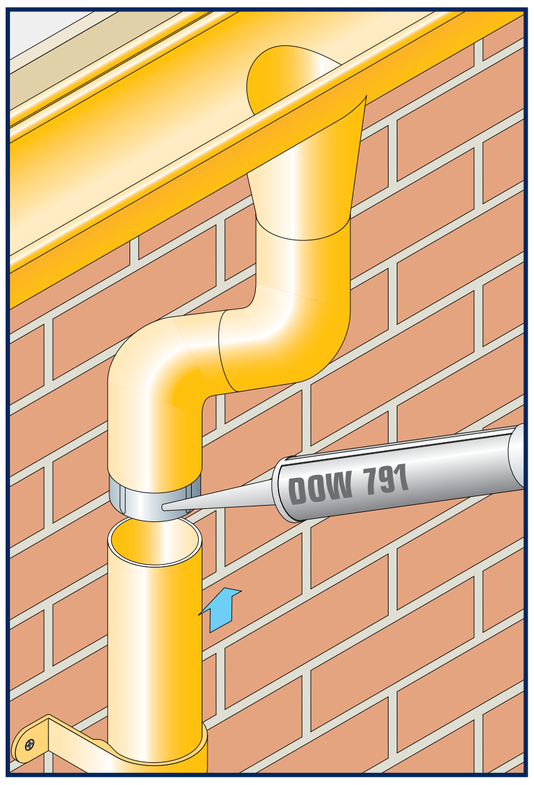

Commence installation from the gutter outlet by fitting and adjusting the two part offsets. Check vertical plumb line and assemble internal spigot joints using DOW 791 silicone sealant then fit first pipe clip.

Pipe Clips

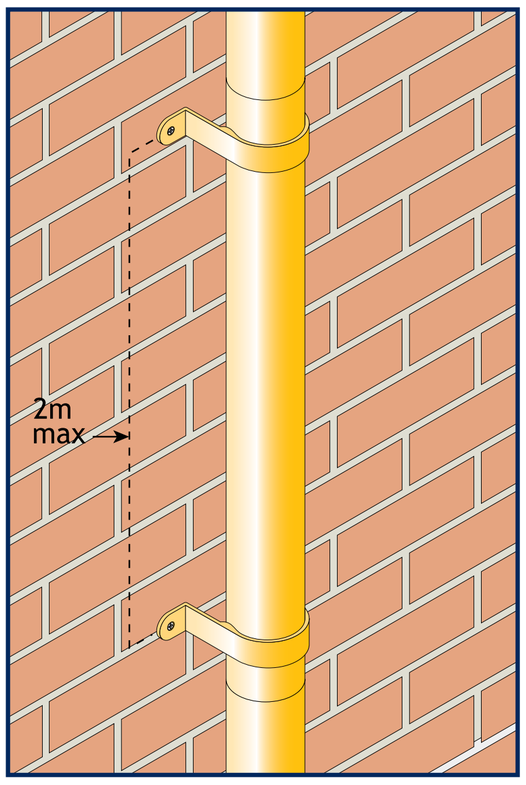

Pipe clips support and hold the rainwater pipe to the structure. All three types of pipe clip, Standard, Small Base and Extended Base can be used to conceal the pipe joints.

Fix to wall using No12 x 50mm screws provided. Allow two pipe clips per pipe length (maximum 2m centres) and fix with screws, placing a washer beneath the screw head.

Tools Required for Flushjoint

- String or plumb line
- Tape measure
- Drill
- File
- Masonry bit
- Wall fixing (e.g raw plug)
- Cleaning rags
- Marker pen
- Solvent cleaner
- Posi and plain screwdriver
- Paintbrush
- Hacksaw
- Masking tape
- Mastic gun
- Spirit level
- Protective gloves
- Adjustable spanner

General Installation Sequence

- Complete installation of gutters; alternatively, locate rainwater heads
- Locate
- Position offsets, bends and branches
- Fit pipes and brackets
- Fit plinth offsets
- Fit access doors and shoes

Pipes, Bends and Branches

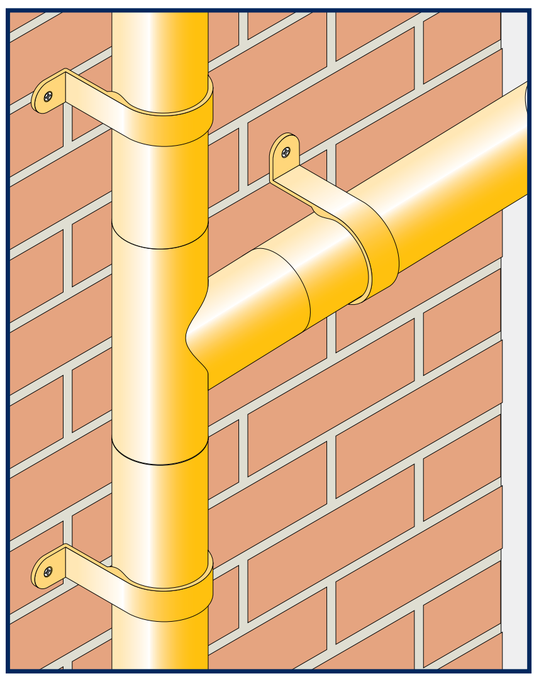

Continue to assemble the stack taking care not to scratch the pipe coating whilst sliding pipe clips into position.

Bends and branches are normally secured between pipe ends. Where additional fixing is required e.g a change of direction at a bend, use additional pipe clips.

Shoes

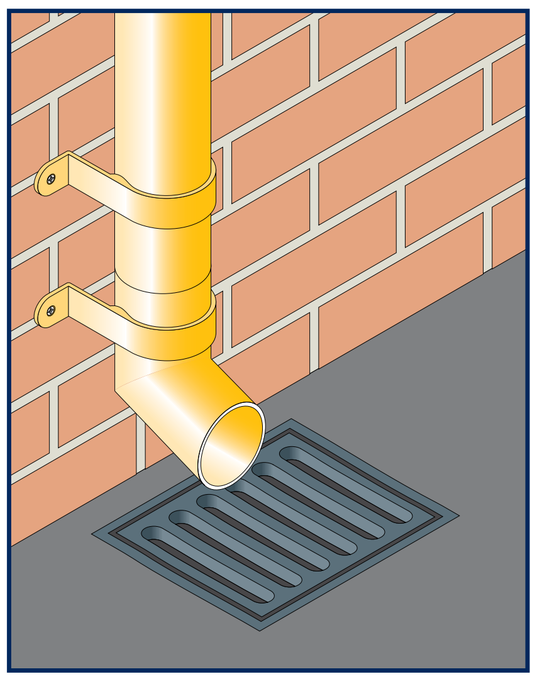

At ground level if the rainwater pipe does not connect directly to the gully, pipes can terminate with a shoe fitting for free discharge over the gully.

Access Pipes

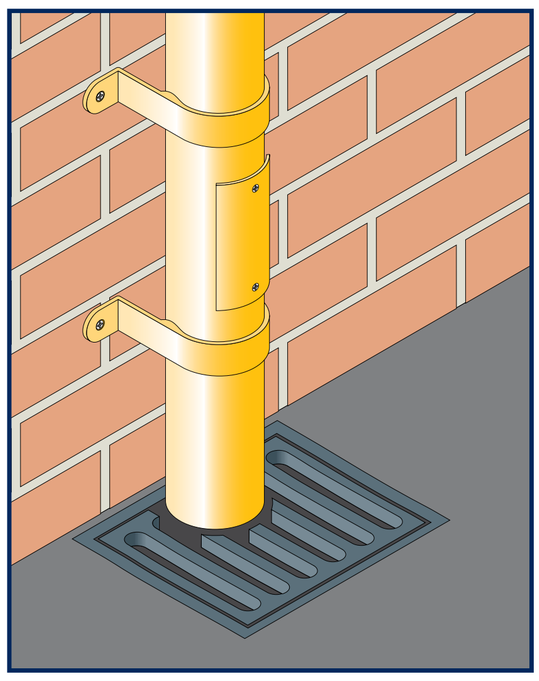

Where rainwater pipes directly connect to the gully it is recommended that an access pipe is fitted no more than 750mm above ground level.

Sealant

For durable all weather seals and best results, Alumasc recommend the use of DOW 791 silicone sealant.

Rainwater Heads

Fix to masonry through external lugs or preformed holes in back.

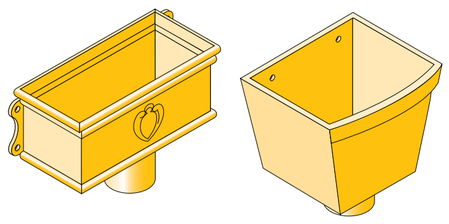

Installation - Swaged Rainwater Pipes

Contents

Swaged rainwater pipes consist of circular pipes with swaged joints between pipes and fittings. Pipes are bracket fixed and generally assembled from the eaves downward. Loose-fit pipe clips are used to secure Swaged.

Pipe Alignment

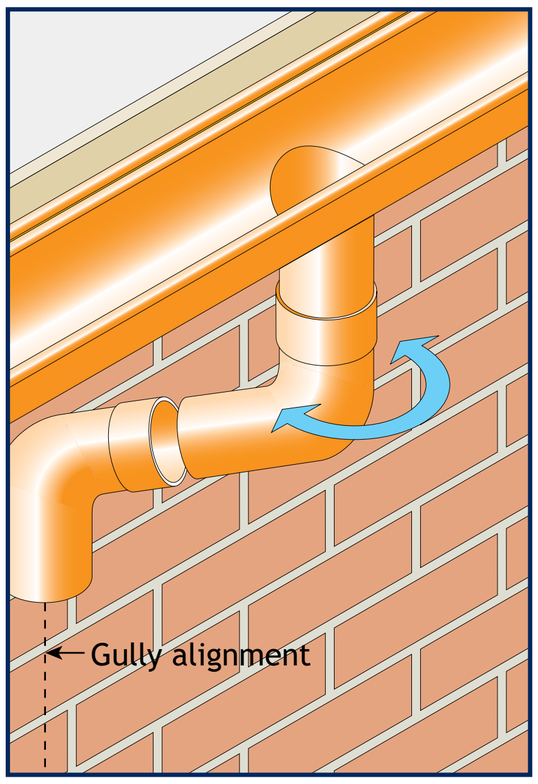

Check alignment of gutter outlet to gully.

Round pipe systems are more flexible to install as offsets can be adjusted and "swung" into alignment with the gully position.

Outlets and Offsets

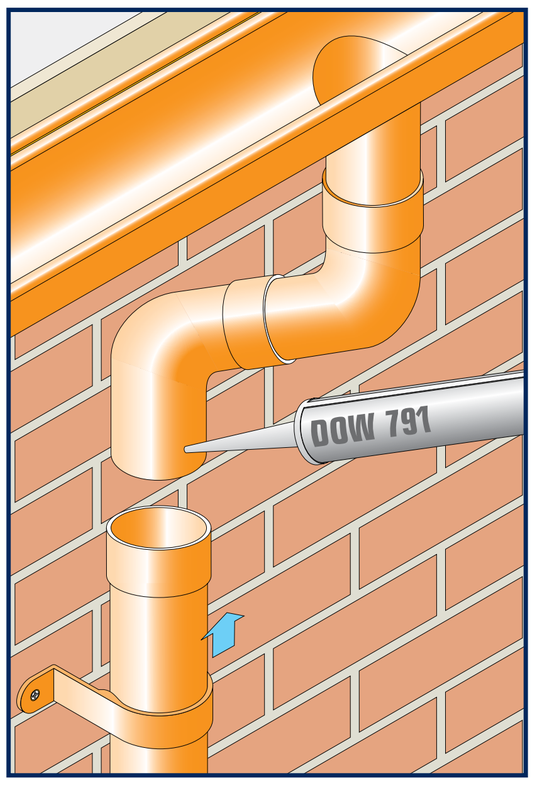

Commence installation from the gutter outlet by fitting and adjusting the two part offsets. Check vertical plumb line and assemble swaged joints using DOW 791 silicone sealant then fit first pipe clip.

Pipe Clips

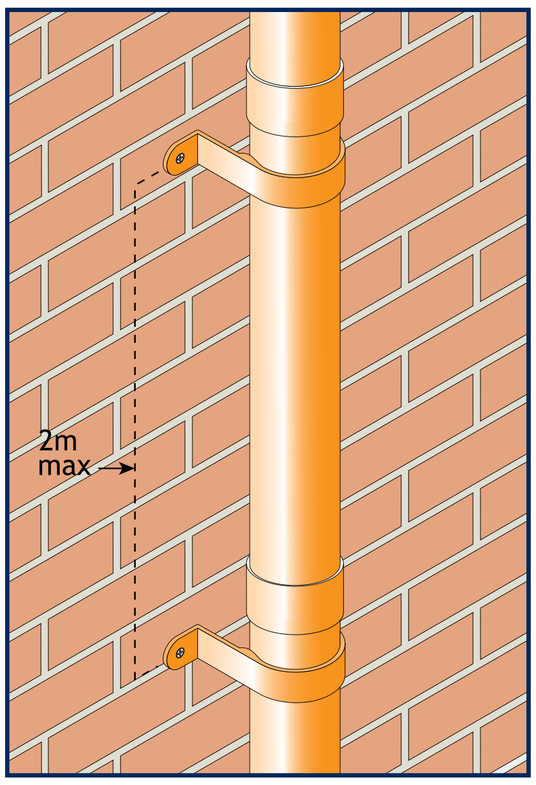

Pipe clips support and hold the rainwater pipe to the structure. All three types of pipe clip, Standard, Small Base and Extended Base can be used.

Fix to wall using No12 x 50mm screws provided. Allow two pipe clips per pipe length (maximum 2m centres) and fix with screws, placing a washer beneath the screw head.

Pipes, Bends and Branches

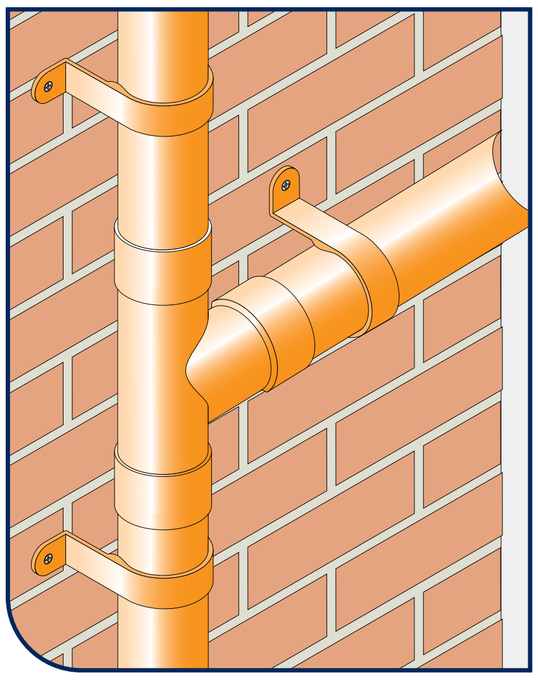

Continue to assemble the stack taking care not to scratch the pipe coating whilst sliding pipe clips into position.

Bends and branches are normally secured between pipe ends. Where additional fixing is required e.g a change of direction at a bend, use additional pipe clips.

Shoes

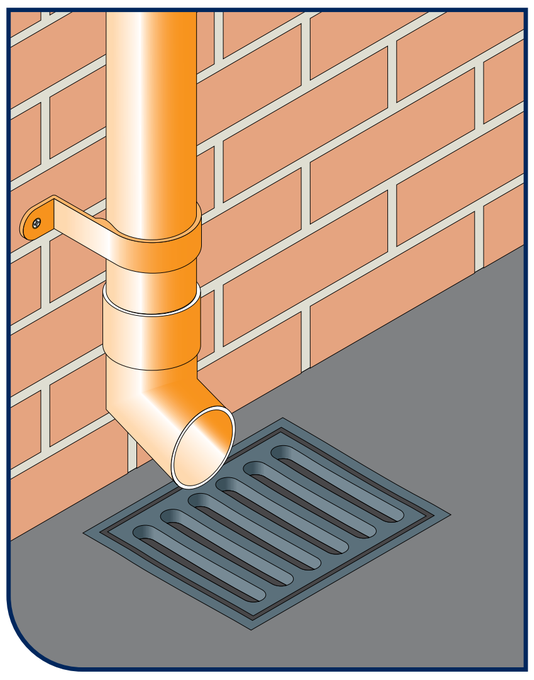

At ground level if the rainwater pipe does not connect directly to the gully, pipes can terminate with a shoe fitting for free discharge over the gully.

Access Pipes

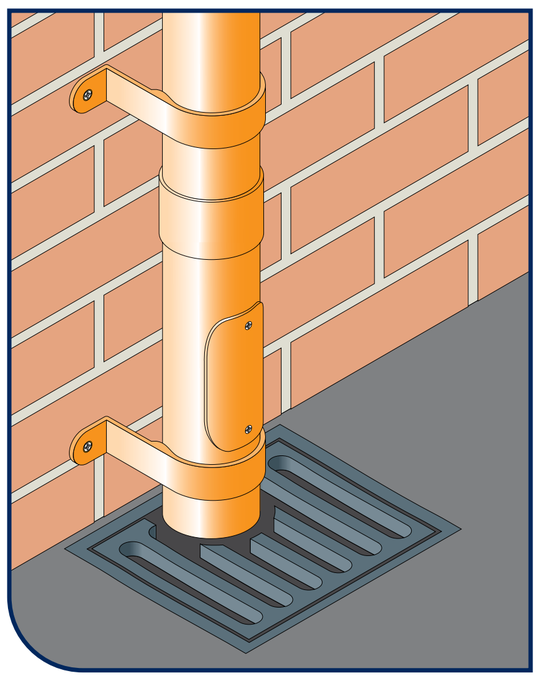

Where rainwater pipes directly connect to the gully it is recommended that an access pipe is fitted no more than 750mm above ground level.

Tools Required for Swaged

- String or plumb line
- Tape measure
- Drill
- File
- Masonry bit
- Wall fixing (e.g raw plug)
- Cleaning rags
- Marker pen
- Solvent cleaner
- Posi and plain screwdriver
- Paintbrush
- Hacksaw
- Masking tape
- Mastic gun
- Spirit level
- Protective gloves
- Adjustable spanner

General Installation Sequence

- Complete installation of gutters; alternatively, locate rainwater heads
- Locate
- Position offsets, bends and branches
- Fit pipes and brackets
- Fit plinth offsets
- Fit access doors and shoes

Sealant

For durable all weather seals and best results, Alumasc recommend the use of
DOW 791 silicone sealant.

Rainwater Heads

Fix to masonry through external lugs or preformed holes in back.

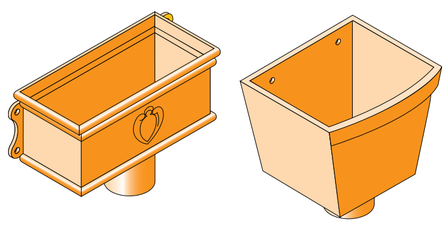

Installation - Guardian Rainwater Pipe

Contents

Guardian is a range of flush fitting architectural feature pipes in round, square and rectangular pipe section with factory fitted internal spigots and fully concealed bracketry. Pipe systems are assembled from ground upwards and are designed to be ungrippable, providing a high level of security.

Pipe Alignment

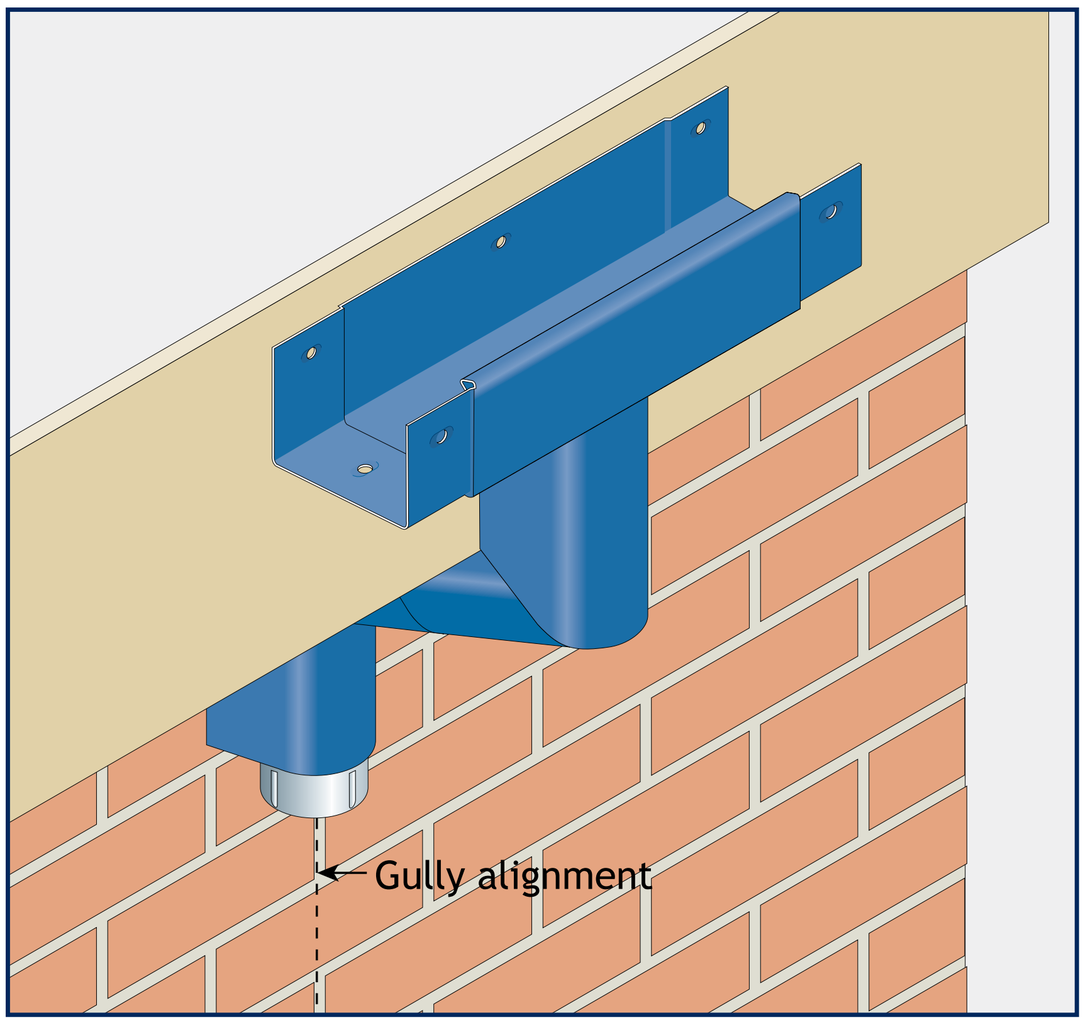

Guardian pipes are assembled from ground upwards.

Use a plumb line to ensure correct alignment between gully at ground level and the gutter outlet.

Pipe Fixing Plates

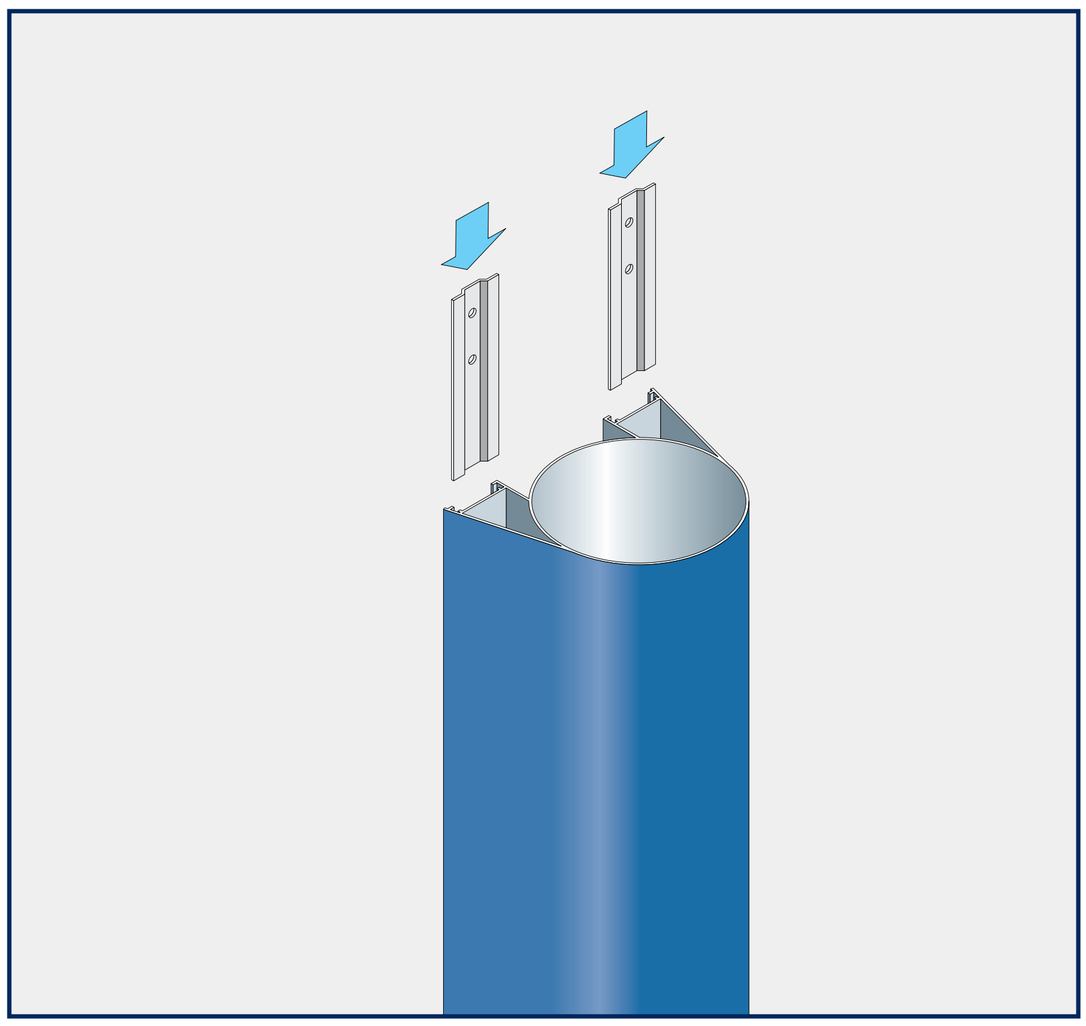

When joining pipe lengths tap two fixing plates per pipe connection into the pipe receiver rails using a block of wood to prevent damage.

The fixing plates have “stops” to limit insertion.

Fix to the wall using No12 x 38mm pan head screws.

Gully Connection

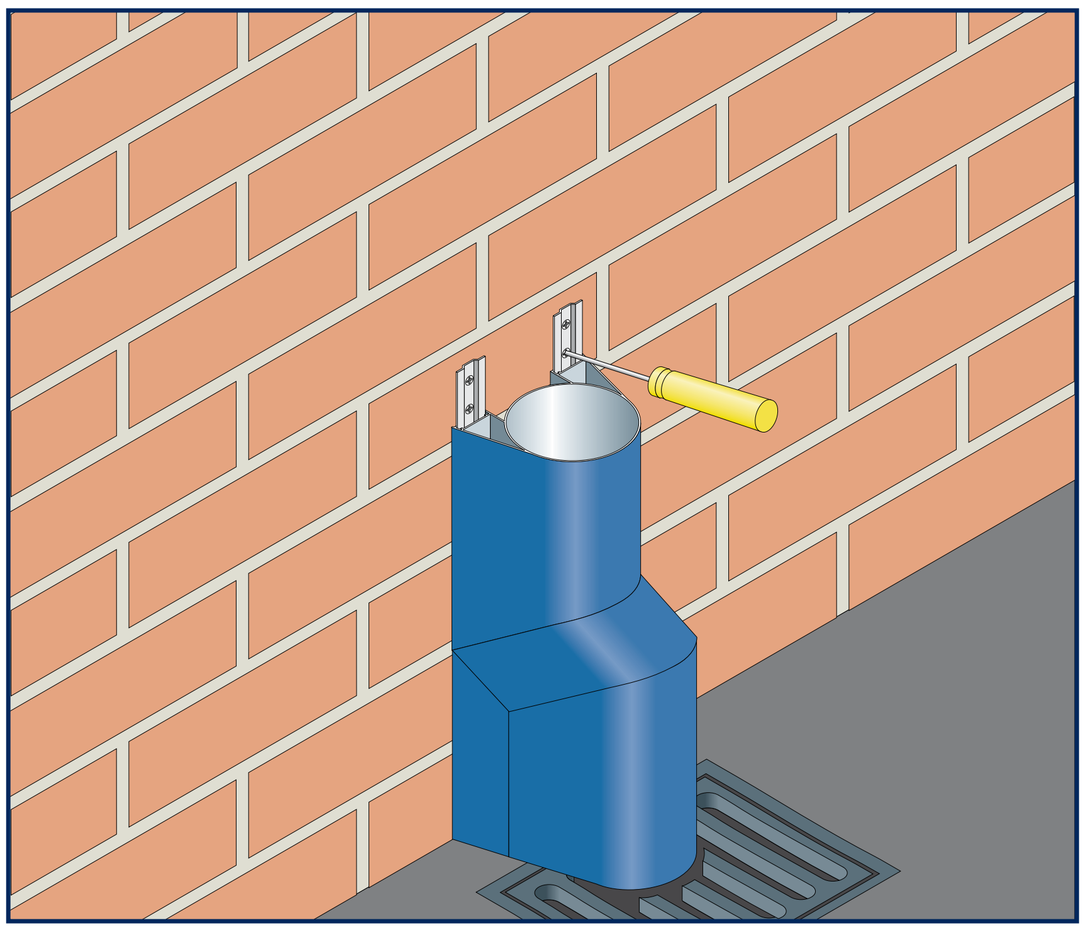

Commence installation by fitting fixing plates to the drain connector component and then fixing to the wall.

This component may be either a plain pipe section or include a rodding access.

Where the gully position is away from the wall, a shroud is available to order to eliminate gap. (Full site dimensions required).

Pipe Assembly

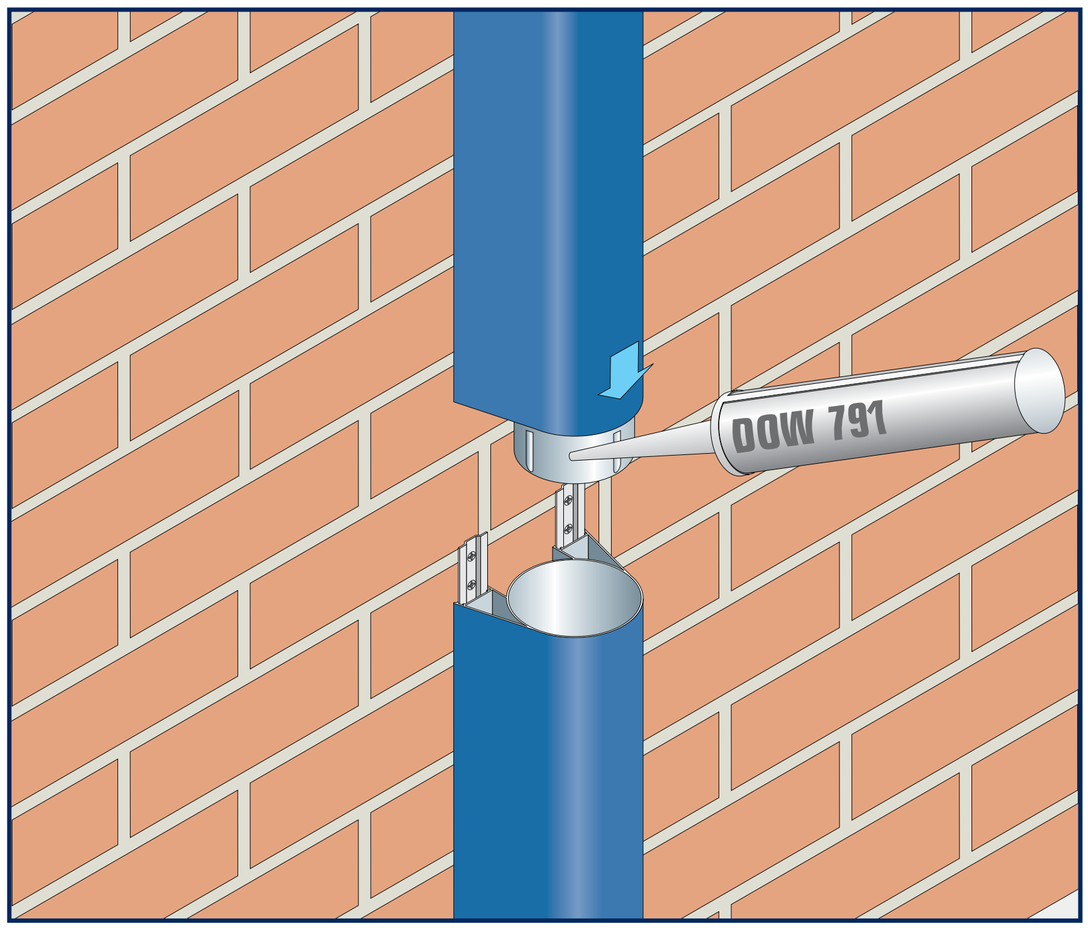

Pipe lengths are connected by sliding new pipe sections down over the fixing plates of the pipe below.

Seal spigot joints by applying DOW 791 silicone sealant to spigot and receiving pipe end.

Installation - Guardian Rainwater Pipe Cont.

Contents

Make Up Piece, Offsets and Gutter Connections

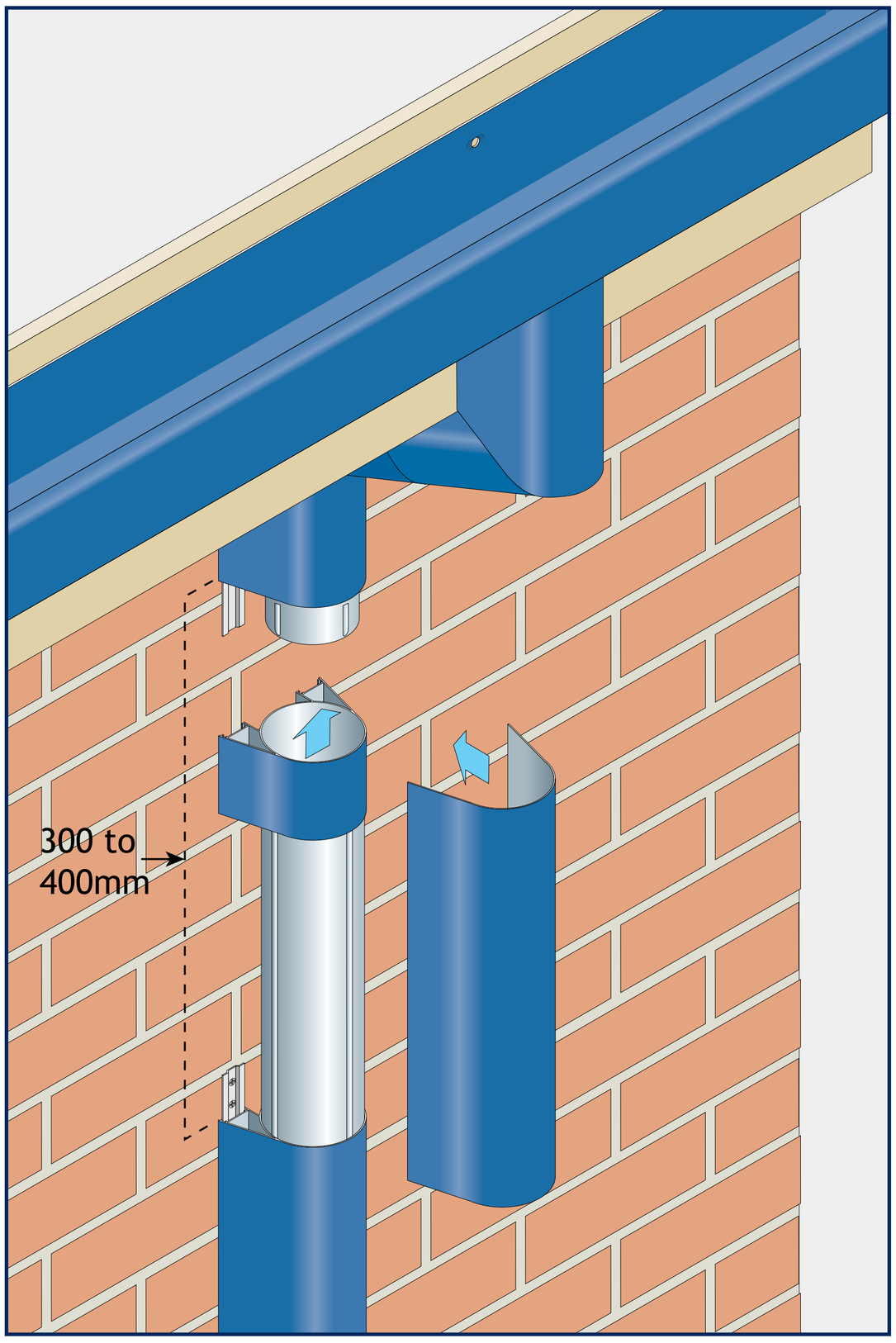

Build up and trim stack to within 300/400mm of underside of gutter and secure with fixing plates.

Insert telescopic section into stack below offset position, (if there is no offset use a straight make-up piece of equal length).

Fit the offset into the make up piece then lift up offset and make up piece to test the fit to the gutter spigot.

Cut a cover piece to fit gap created by the make up piece.

Apply DOW 791 silicone sealant to gutter spigot and adhere cover piece into position.

Tools Required for Guardian

- String or plumb line
- Tape measure
- Drill
- File
- Masonry bit
- Wall fixing (e.g raw plug)
- Cleaning rags
- Marker pen
- Solvent cleaner
- Posi and plain screwdriver
- Paintbrush
- Hacksaw
- Masking tape
- Mastic gun
- Spirit level
- Protective gloves
- Adjustable spanner

General Installation Sequence

- Complete installation of gutters;
- Locate
- Position offsets, bends and branches
- Fit pipes and brackets
- Fit plinth offsets
- Fit access doors and shoes

Sealant

For durable all weather seals and best results, Alumasc recommend the use of DOW 791 silicone sealant.

Alumasc Rainwater Systems

Cast Iron Range Installation Procedures

Preparatory requirements and installation methods for the Apex Heritage gutter and pipe system.

Cast Iron Rainwater Installation - Introduction

Contents

For safe and satisfactory installation of Alumasc rainwater systems, the following good practice guidelines should be reviewed before installation commences. Where unusual or special conditions arise contact Alumasc Technical Services for assistance.

General Preparation and Good Practice

Securely fixed fascia boards must be painted and capable of supporting a fully loaded gutter. Check fascia for straightness and whether shims will be necessary to align brackets without creating stress at gutter joints. Where fascia boards are not being used Alumasc provide top and side fix rafter arm brackets as well as masonry drive-in brackets.

Fix brackets so as to position the gutter centrally and as close below the roof edge as possible, taking into consideration locality and roof slope finish.
If there is a risk of sliding snow, adjust the bracket positions to prevent snow hitting the front of the gutter. Extra fixings, brackets and snowboards should be considered where appropriate.

Where high winds are expected, a small bead of sealant must be applied between gutter and brackets a flexible adhesive. An occasional screw, fixed through a slot in the back of the gutter and into the fascia may be preferred, at a minimum of two per length.

Alumasc advise that the designer and contractor satisfy themselves that the application is suitable.

Setting Out

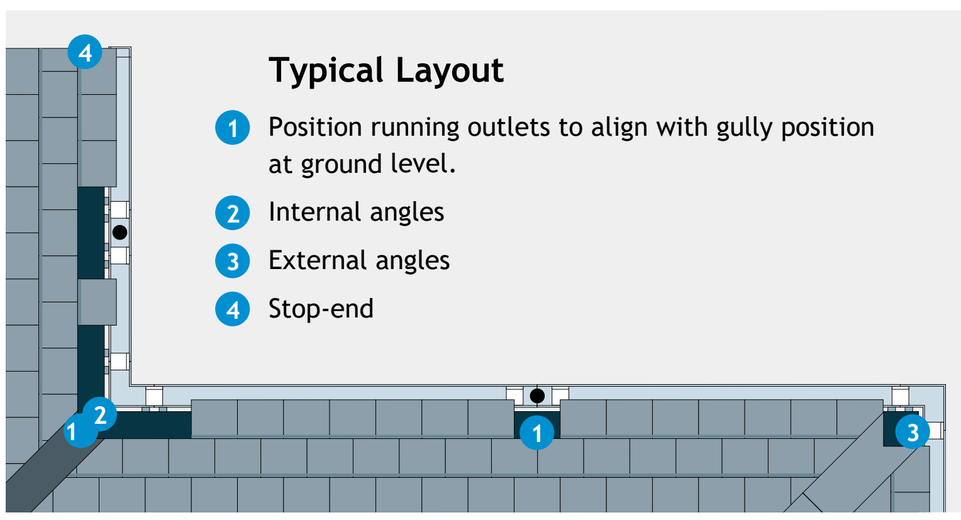

After setting out angles and outlets, fit gutters and brackets according to installation procedures for the specific rainwater system being used, as detailed in this brochure.

Cutting and Drilling

Cast iron can be cut and drilled on site with regular metalworking tools. Pencil cut lines and apply masking tape either side of cut line to protect against accidental saw damage.

Testing

Allow sufficient time for sealant joints to fully cure. Check all bracket and gutter fixings are secure and plug outlets. Fill up to overflow level (but not beyond). Allow 5 minutes before inspecting all joints for leaks.

Health and Safety

Always refer to current Health and Safety legislation, safe systems of work and the relevant material safety data sheets.

Factory-primed System Components

Alumasc supplies cast iron products factory primed with one coat of protective red oxide primer. This primer will give protection against corrosion during transportation and short-term undercover storage, and will provide a suitable surface for final painting. On-site handling and painting are the responsibility of the contractor, and particular environmental considerations should be taken into account when choosing the paint system for final finishing.

Further Protection on Site

Alumasc recommends that on site a further priming coat be applied, followed by 1 undercoat and 2 gloss coats of an alkyd paint system. All individual elements should receive the first of the gloss coats before fixing, and finished with the final gloss coat after the installation is complete. All exposed surfaces must be treated in this way. It is advisable to take the paint finish inside collars and within the ends of rainwater pipes to avoid the possibility of rust staining.

Care & Maintenance, Storage & Handling

Routine Inspection

Regularly clean out rainwater heads and gutters and ensure that downpipes are clear at all times. Check that joints and fixings are secure by periodic inspection, not less than twice a year, and preferably at the beginning of Autumn and again at the end of Winter. When inspecting an installation, even when well fixed, ladders should not be rested against the gutters.

Repainting

The final paint finish on factory-primed cast iron must be maintained to give the longest service life. A well applied paint system might be expected to last from 5 to 7 years on cast iron without further attention. Regular inspection is recommended.

It is recommended that pre-finished cast iron is maintained as above. It is important that any installation damage to the coating is repaired with the appropriate touch-up paint. Any cut pieces exposing bare metal must be coated with primer and top coat.

Other Maintenance Operations

When cleaning adjacent surfaces, cast iron should be protected against all acids and concentrated alkalis.

Storage and Handling

Pre-finished coated rainwater gutters and pipes must be handled with care to prevent scratches and dents. Materials should be stored on a level surface or racking, preferably under secure cover. Uneven fading or water marks on coated and primed surfaces may occur if water enters protective packing or goods are stored exposed to sunlight.

Primed goods will have manufacturing blemishes such as grinding and fettling marks, welding will be visible on fabricated items.
It is recommended primed material is painted on-site.

Store seals and sealants under cover and make secure and separate provision for solvents. Dispose of packing materials responsibly.

Installation - Apex Heritage Gutters

Contents

Apex Heritage gutters are available in a choice of four profiles with a range of brackets to accommodate all types of eaves condition. Each profile range can be connected to cast iron pipework systems in either round, square or rectangular. Assembly and installation of each profile range must be considered individually, although general aspects of preparation are common to them all as shown below.

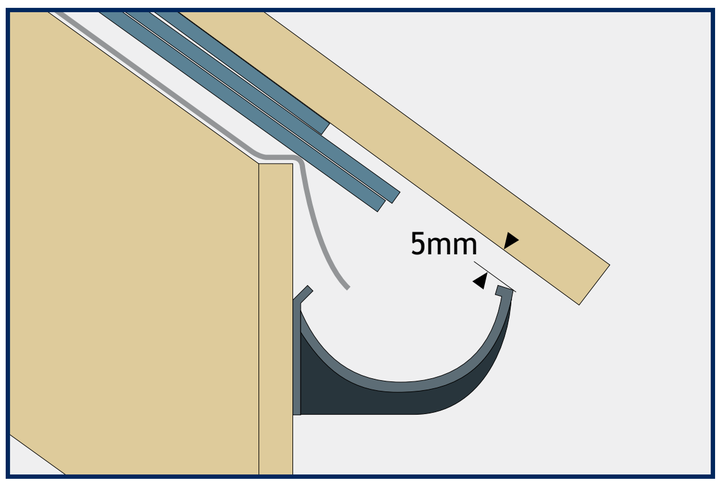

1. Using a straight edge or ruler, shim gutter brackets with 5mm clearance so that the last roof tile or slate will align with the mid point of the gutter.

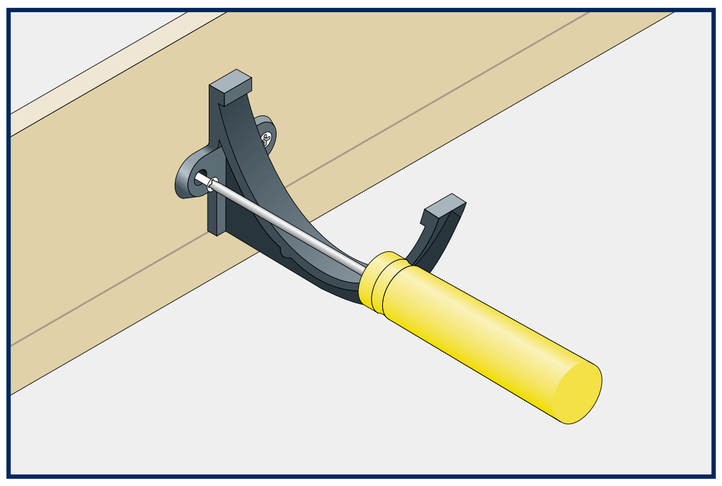

2. Generally, position brackets at 915mm centres allowing additional brackets on either side of where gutter joints will occur.

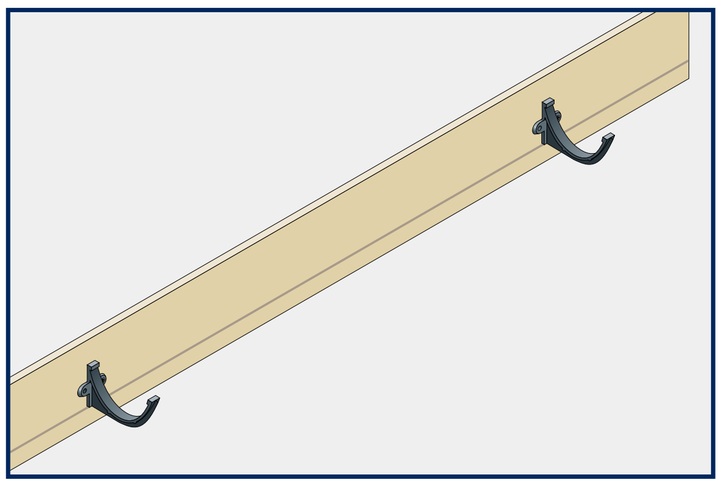

3. Use a string line to set out brackets to a fall of 1:600 to 1:350 (max) or if not possible, level.

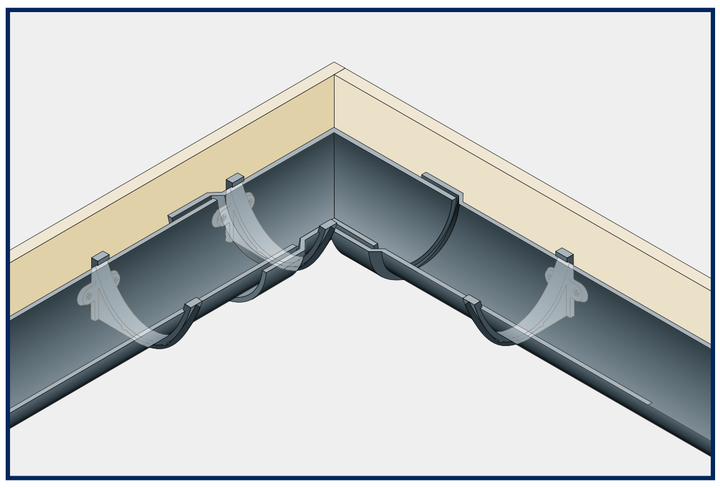

4. Plumb line outlets with gullies at ground level. Position angles, allowing an additional bracket adjacent to the joint with the gutter length.

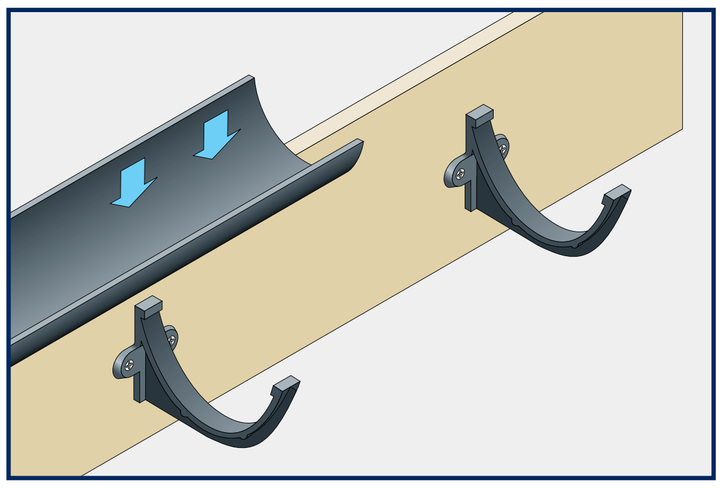

5. Lower the gutter onto the brackets ensuring sufficient clearance for the gutter joint. Clip gutter into bracket.

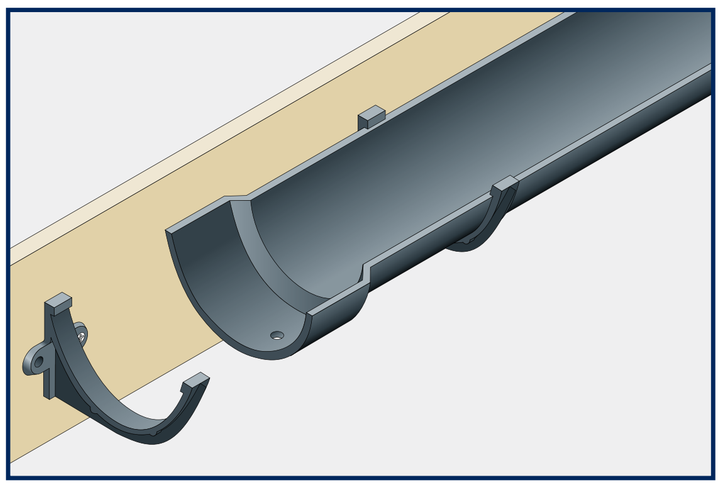

6. Cast gutters overlap at the joint with a spigot and socket. Thoroughly clean and degrease the ends that must be jointed.

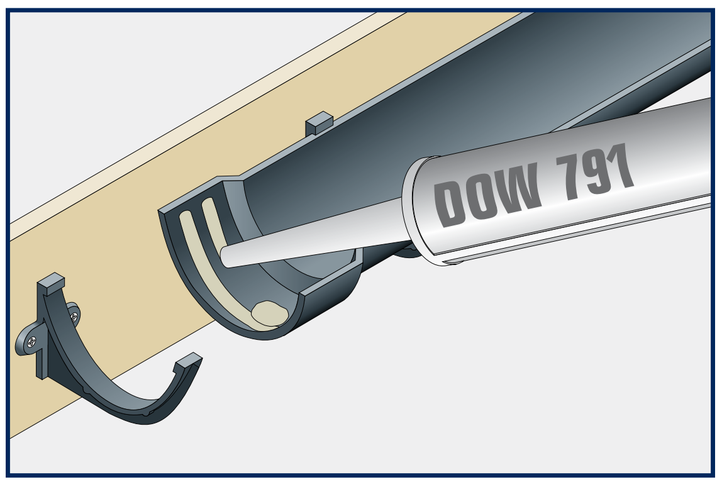

7. Apply two 6mm beads of DOW 791 silicone sealant either side of, and around the fixing hole.

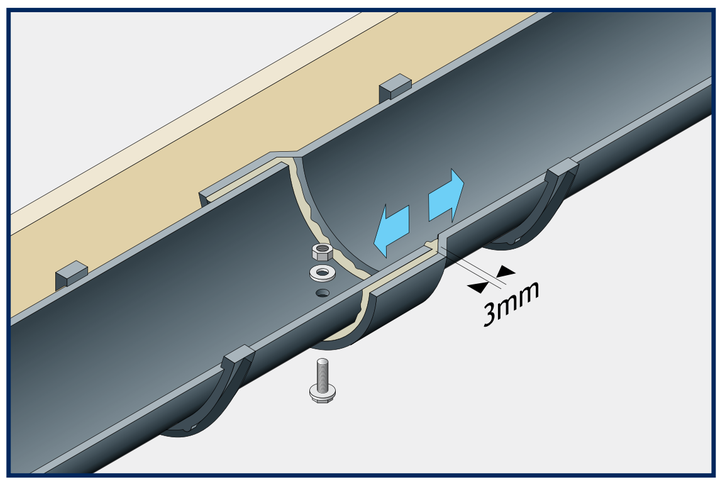

8. Insert the spigot end of the gutter allowing a 3mm expansion gap. Secure joint using bright zinc plated, mild steel M6 x 25mm nut, bolt and washer provided. (Bolt head preferably to underside).

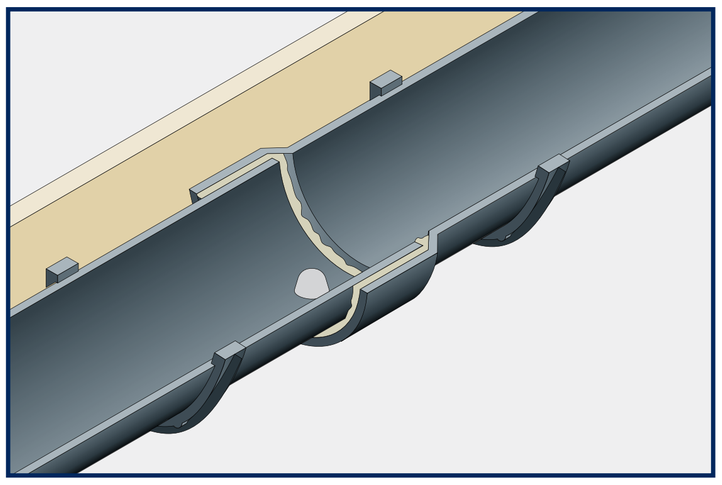

9. Finally, cone-off the exposed bolt stud and nut inside the gutter with a generous application of silicone sealant. Tool off excess silicone around the joint and from external surfaces.

Hydrostrip Alternative Sealing Method

For half round gutters only (nominal sizes 100, 115 and 125mm – 150mm), the unique Alumasc Hydrostrip system is recommended. The Hydrostrip system comprises preformed rubber seals that are quick and easy to install, and totally reliable. Hydrostrip offers a faster and cleaner solution to gutter jointing than traditional mastic jointing sealants.

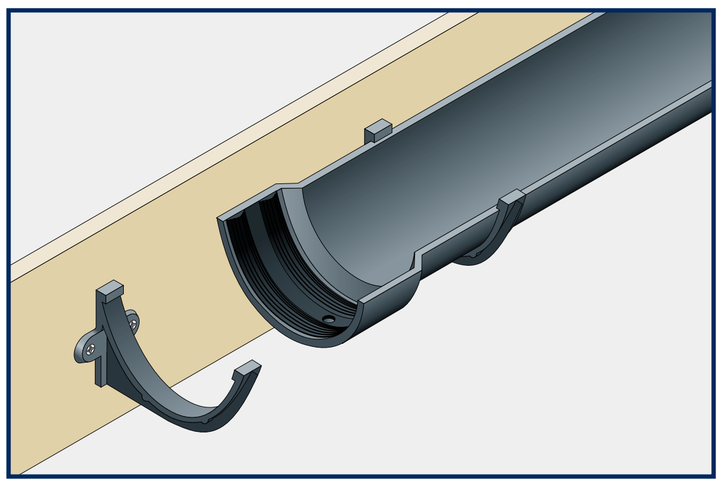

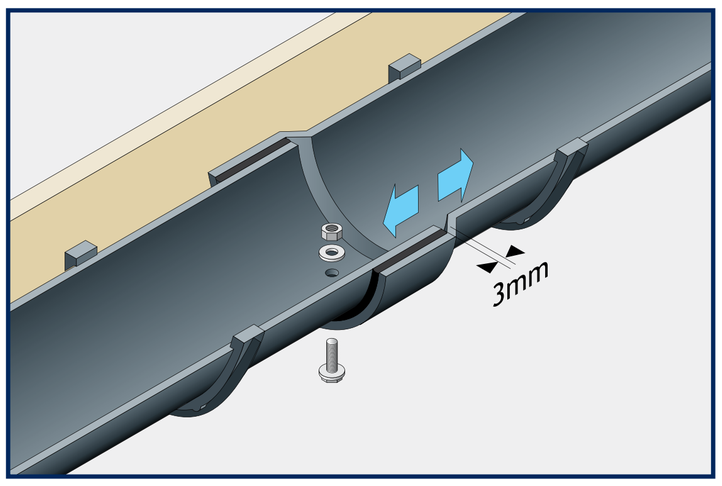

Installation - Apex Heritage Rainwater Pipes

Contents

Apex Heritage traditional rainwater pipes have cast pipe sockets either with ears for wall fixing or without for use with holderbats. Installation is generally from the eaves downward.

Saw cuts must be square and free from dents and burrs. A light application of silicone sealant must be applied to both surfaces to ensure a waterproof seal.

Pipe Alignment

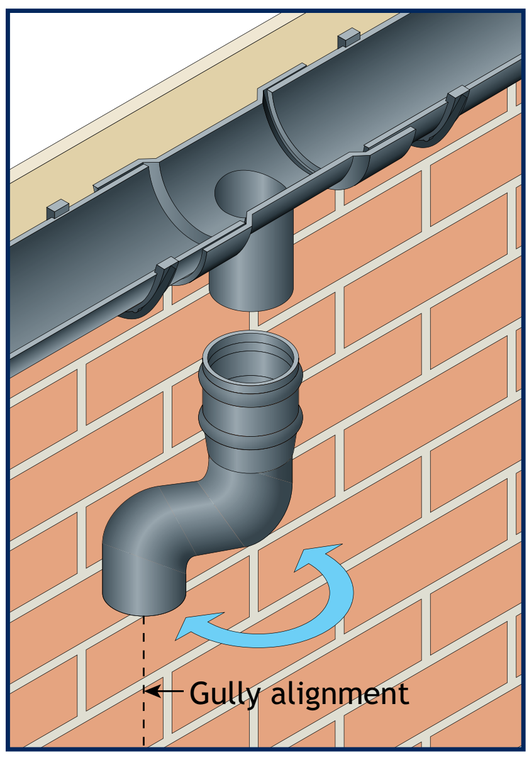

Where square or rectangular pipes are being installed and offsets are required, alignment between the gutter outlet and gully must be exact.

Round pipe systems are more flexible to install and offsets can be adjusted and "swung" into alignment with the gully position.

Outlets and Offsets

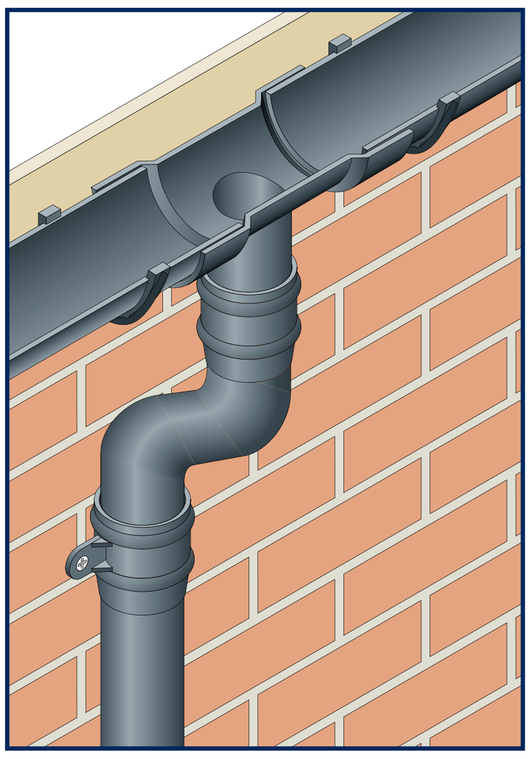

Commence installation from the gutter outlet by fitting offsets.

Check vertical plumb line positioning and seal spigot and socket joints using DOW 791 silicone sealant.

Pipe Jointing and Fixing

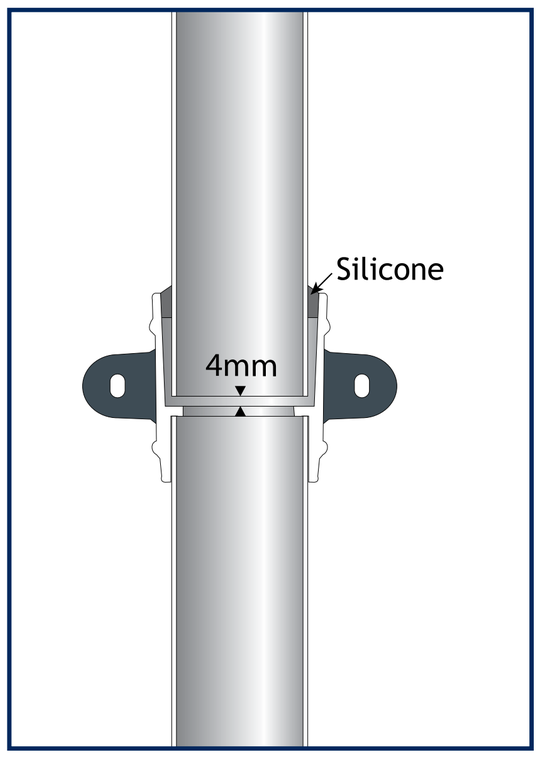

Seal with DOW 791 silicone sealant.

Fix to wall at 2m centres using No12 x 50mm screws. Eared sockets have elongated fixing holes to permit the use of pipe nails.

Tools Required

- String or plumb line
- Tape measure
- Drill
- File
- Masonry bit
- Wall fixing (e.g raw plug)
- Cleaning rags
- Marker pen
- Solvent cleaner
- Posi and plain screwdriver
- Paintbrush
- Hacksaw
- Masking tape
- Mastic gun
- Spirit level
- Protective gloves
- Adjustable spanner

General Installation Sequence

- Complete installation of gutters; alternatively, locate rainwater heads
- Position offsets, bends and branches
- Fit pipes and brackets
- Fit plinth offsets
- Fit access doors and shoes

Sealant

For durable all weather seals and best results, Alumasc recommend the use of DOW 791 silicone sealant.

Rainwater Heads

Fix to masonry through external lugs or preformed holes in back.

Bends and Branches

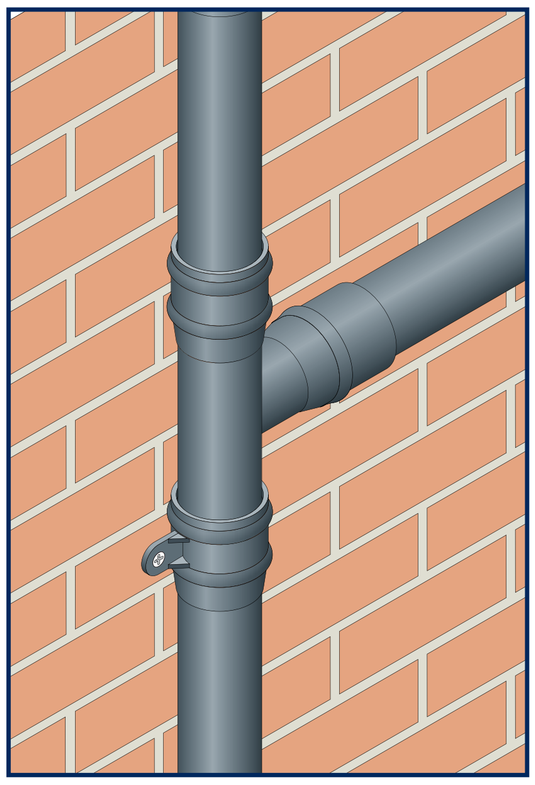

Bends and branches are secured into the pipe socket.

Shoes and Access Pipes

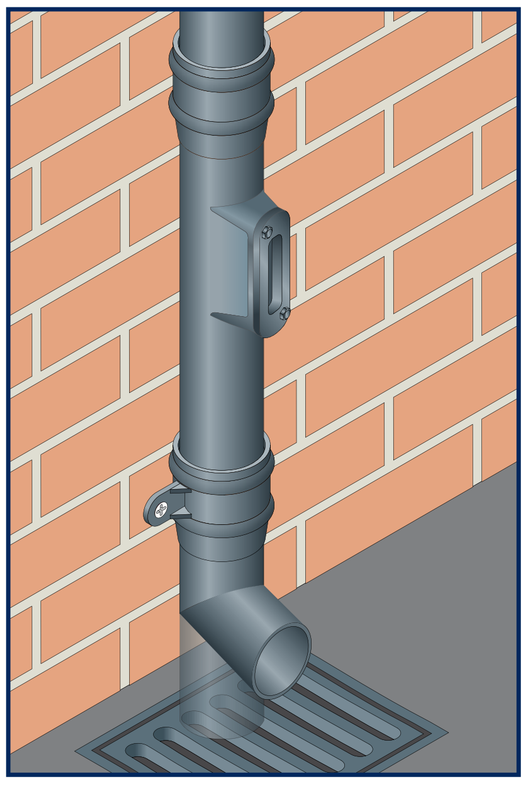

At ground level rainwater pipes can terminate with a shoe for free discharge over a gully or be directly connected into the gully.

In the case of direct connections it is recommended that an access pipe fitting is included within 750mm of ground level.

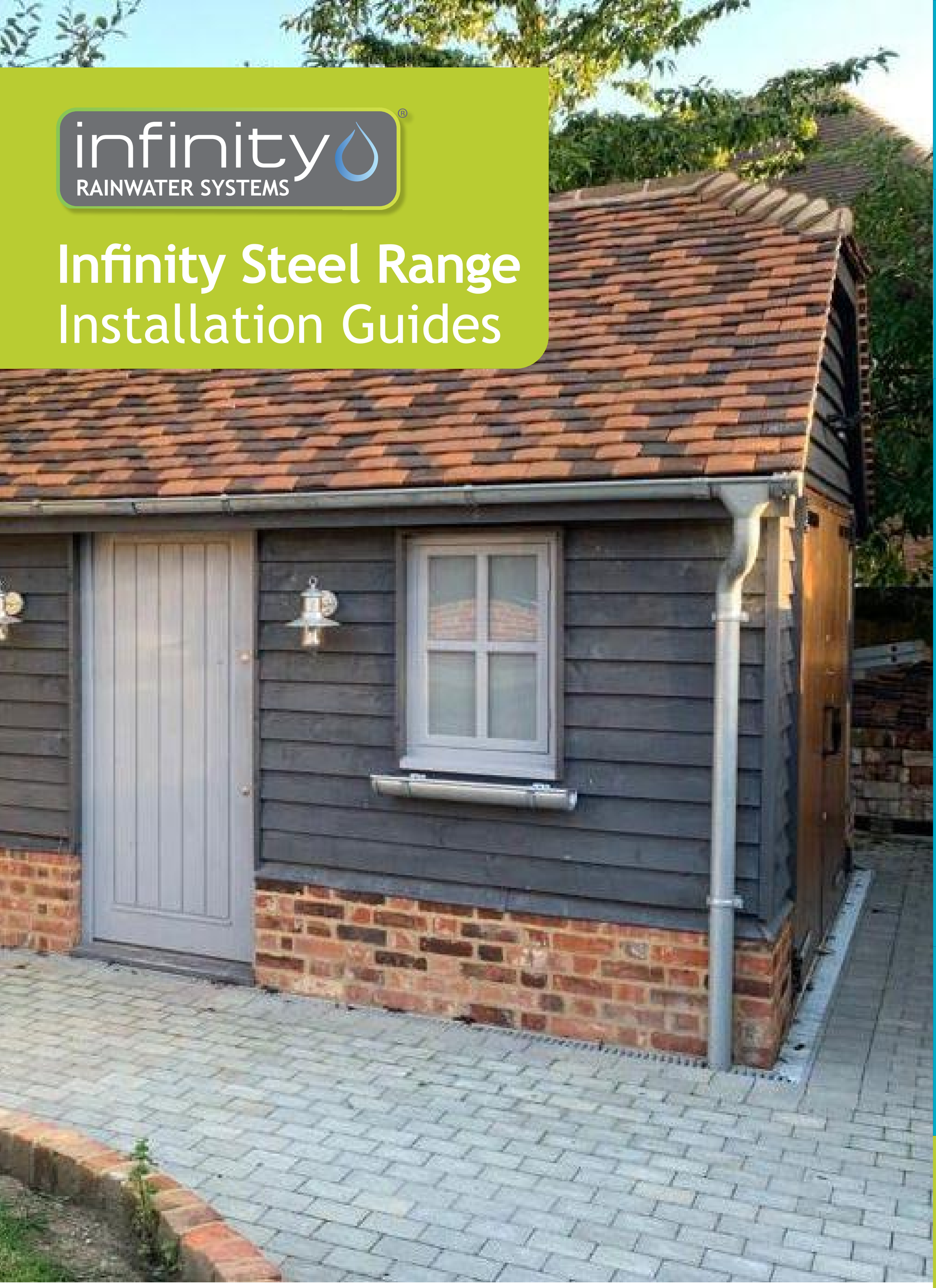

infinity® RAINWATER SYSTEMS

Infinity Steel Range Installation Guides

Installation - Gutters

Contents

Alumasc steel gutters are available in the half round profile in four sizes with a range of brackets to accommodate all types of eaves. The system is dry jointed without the need for additional silicone sealant.

The gutter range can be connected to the steel pipework system and secured by standard pipe clips. The assembly and installation must be considered individually depending on the project, although general aspects of preparation are common to all as shown below.

We recommend the use of gloves when handling our steel products. Some finger marks can remain after handling without gloves and some sharp edges can occur.

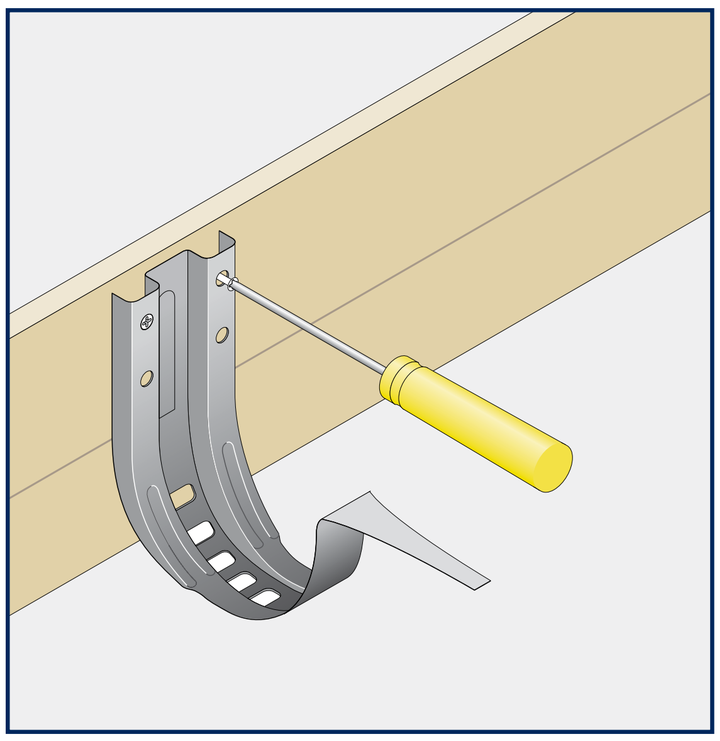

1. Generally position the fascia brackets at 915mm centres, using at least 3 brackets per gutter length. Use 2 screws on both the left and right fixing options and 1/no underneath the gutter securing tab.

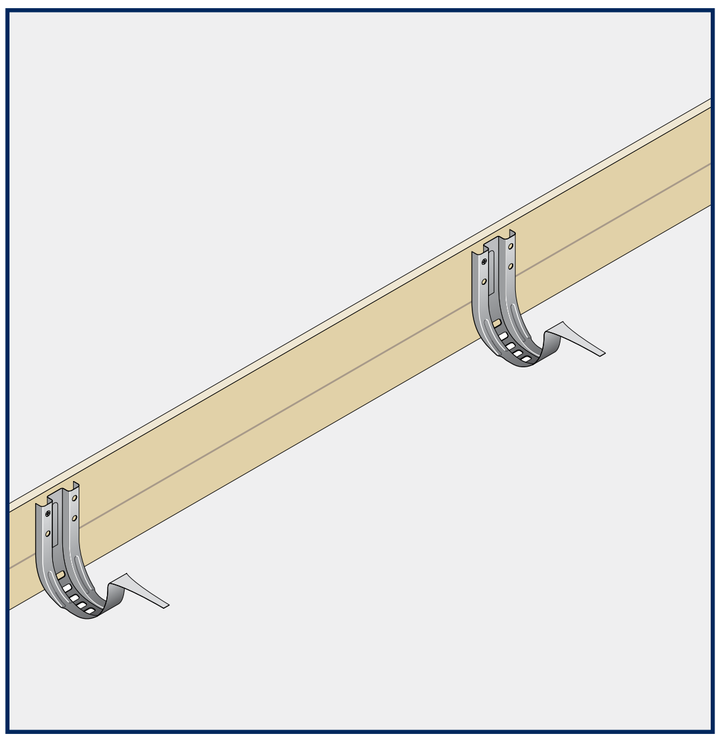

2. Use a string line to set out your fascia brackets along the gutter run allowing for a fall of 1:600 to 1:350 (max).

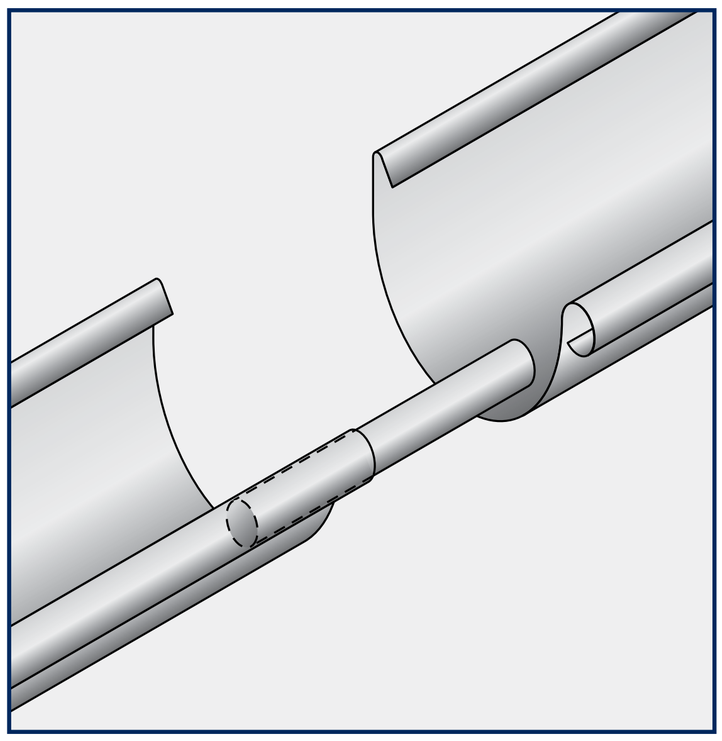

3. A bead connector is used to join two lengths of gutter. Insert the connector into the front roll of each gutter length. Allow for a 4mm expansion gap.

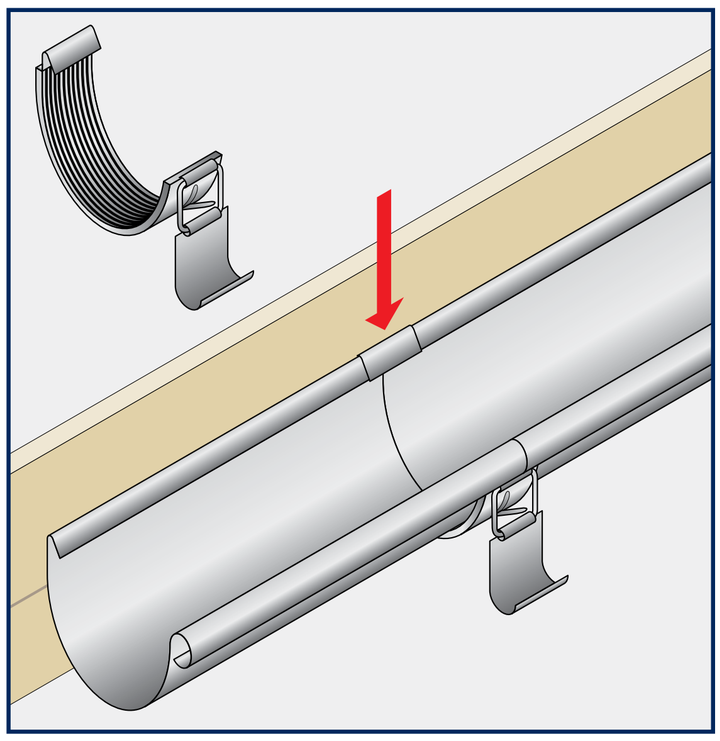

4. An EDPM rubber sealed union connector is used to connect the gutter lengths and angles together. Locate the union connector over the rear edge of the gutter.

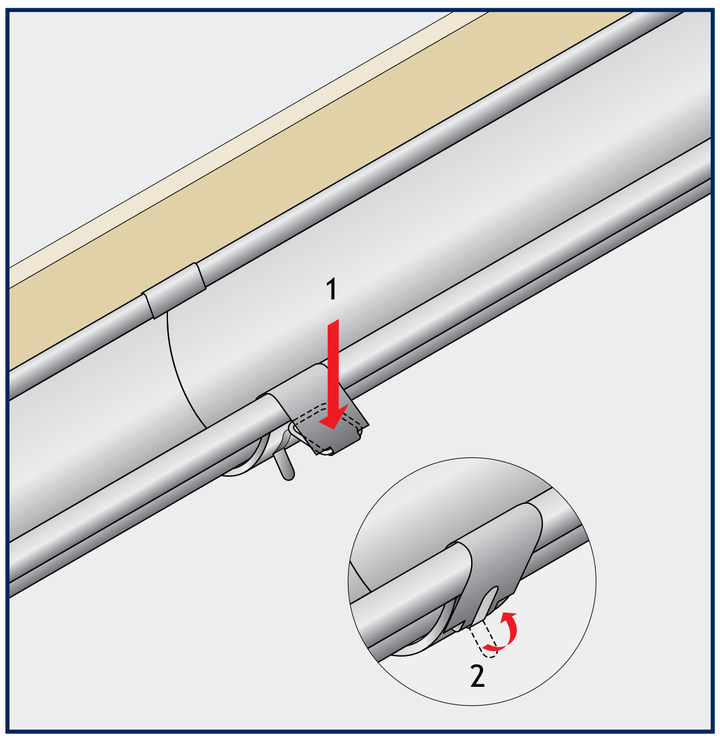

5. Locate the clasp over the front roll edge of the gutter. Push down on top of the clasp and squeeze the clasp shut. Fold the locking tab over to fully secure.

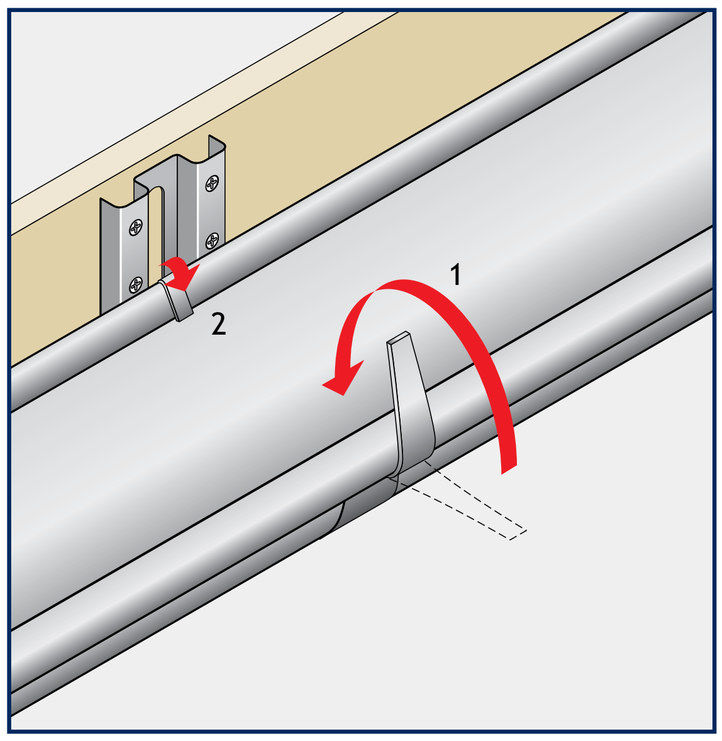

6. Locate the gutter into the fascia bracket and seat level, then fold the front tab of the fascia bracket around the front roll and into the gutter. Fold the rear tab of the fascia bracket down and over the rear edge of the gutter.

For further information or assistance please contact The Rainwater Technical Team on Tel 01536 383810

Installation - Rainwater Pipes

Contents

Alumasc steel downpipes are available as a circular profile in 2 sizes with a range of pipe clips and fittings to accommodate all types of installation situations. The downpipes and offsets are push-fit with 'swaged' ends, again for fast and watertight installation.

The assembly and installation must be considered individually depending on the project, although general aspects of preparation are common to all as shown below.

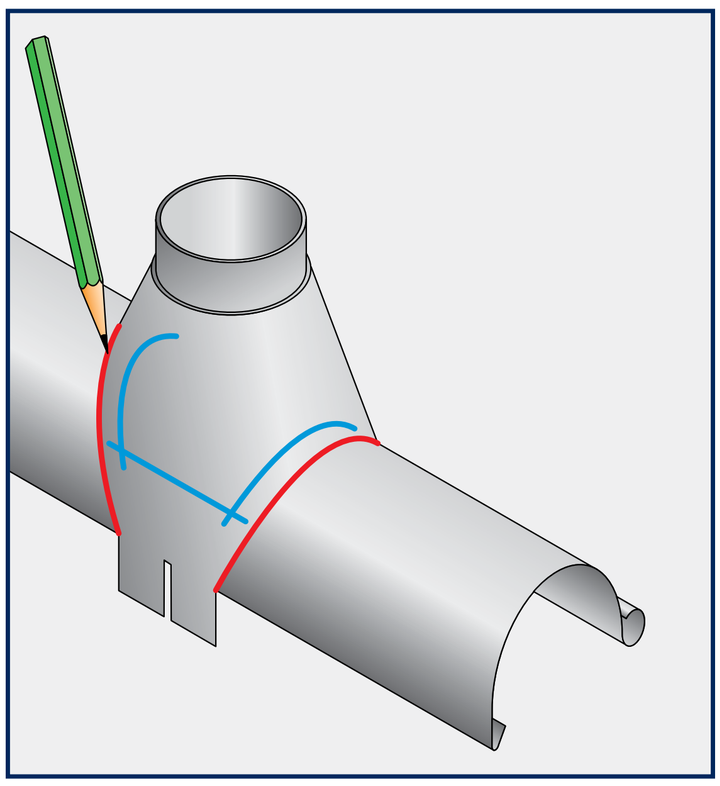

1. When installing a 'wrap around outlet' mark the desired location of the outlet by drawing a line either side of the outlet along its edge. Draw a further line 20mm inside of the outer lines and join these inner lines together in an oval pattern. This becomes the marking for the cut out hole.

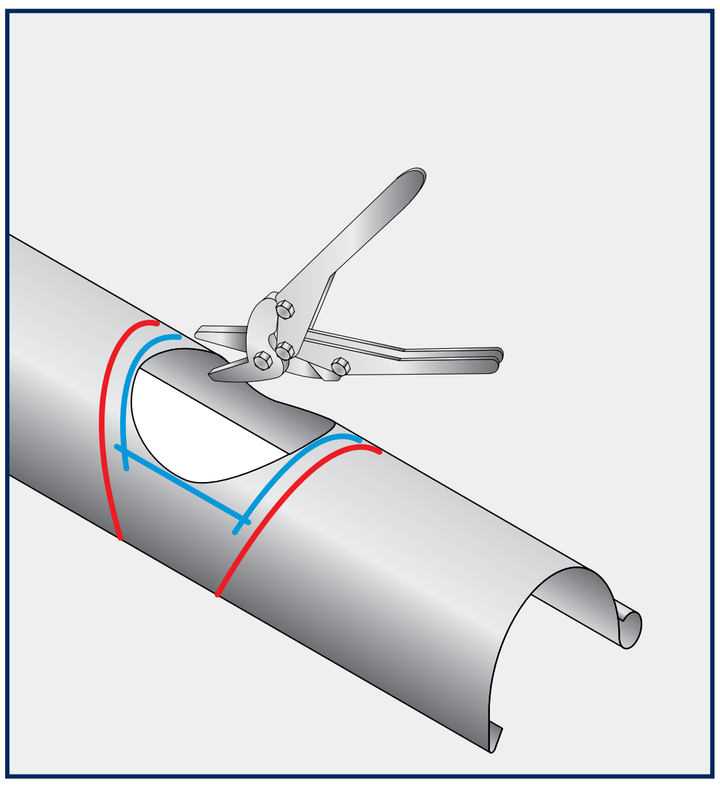

2. Use a hacksaw to make an initial hole in the gutter, and then use a set of tin snips to cut out the inner hole that you have marked out.

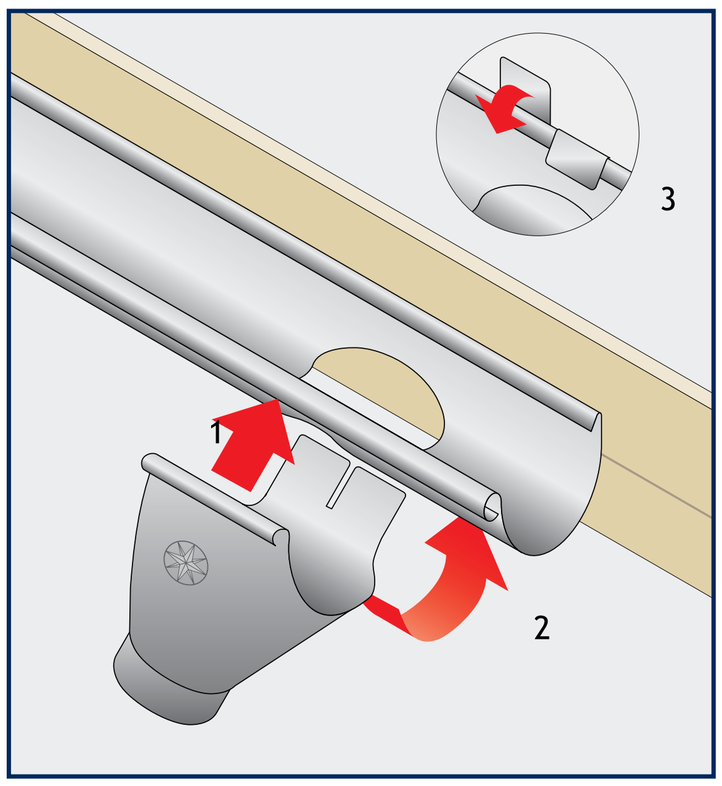

3. Attach the outlet to the gutter and fold the rear tabs of the outlet over the rear edge of the gutter, making sure the outlet is aligned correctly to accept the downpipe.

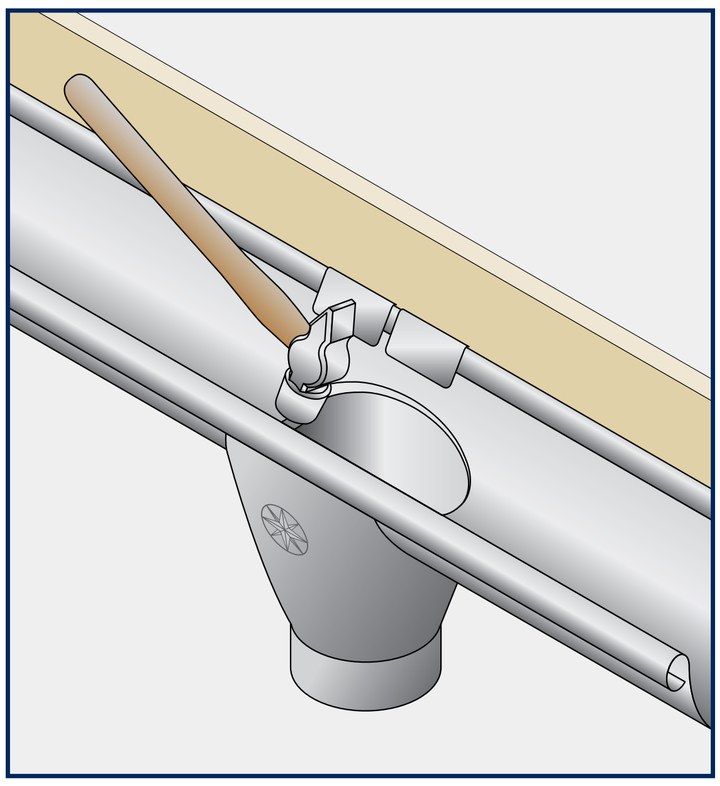

4. Tap the inner rough edges of the hole that was cut in the gutter, down into the outlet, to ensure a smooth flow of water.

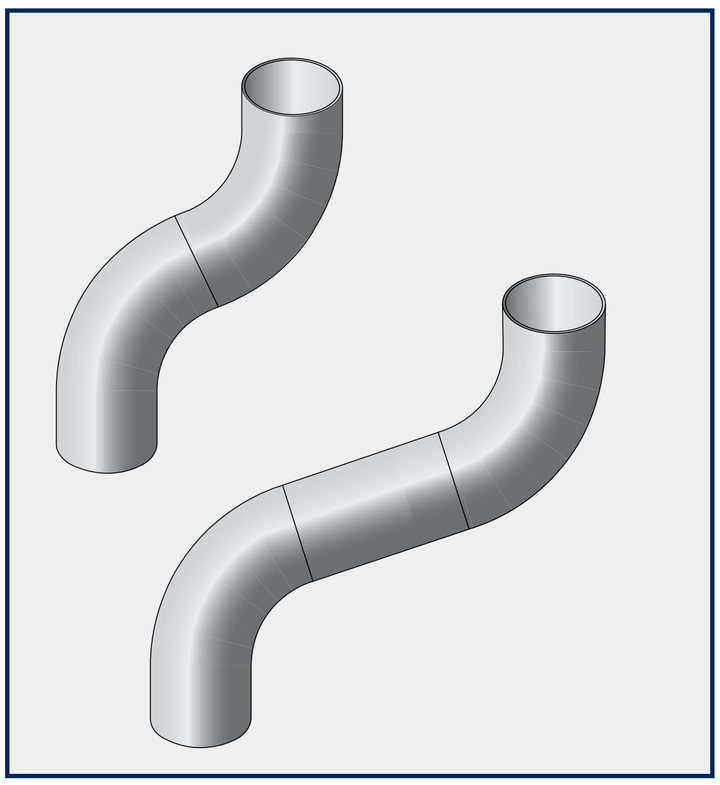

5. Offsets are achieved using 2/no 70° bends, with larger offsets being made by inserting a pipe length between the two bends.

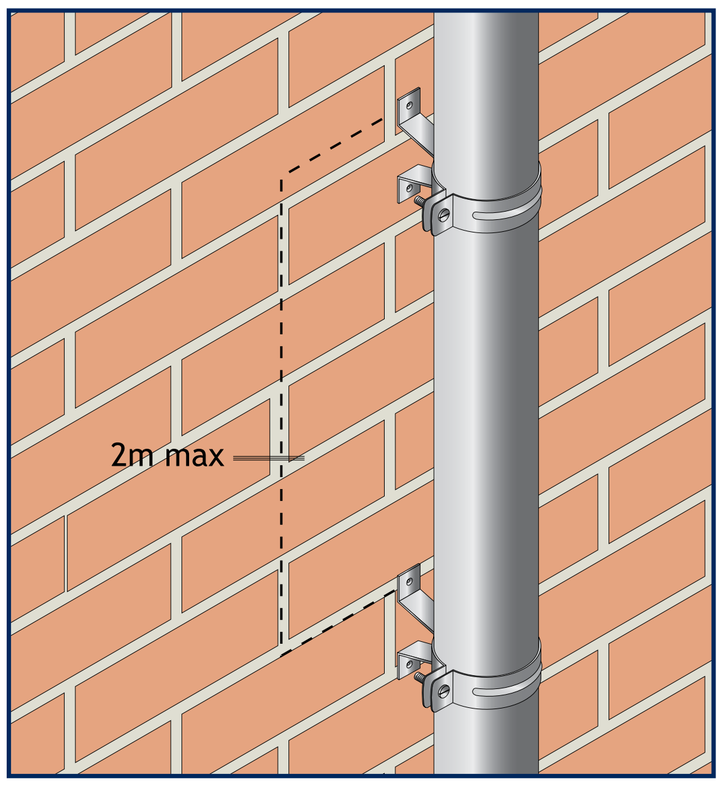

6. Downpipes should be installed using at least 2/no pipe clips per length. Mark out the clips locations and level with a sprit level or plumb line. Open the tightening screw to allow the pipe to be inserted, close the clip and re-tighten, making sure not to over tighten and damage the downpipe.

For further information or assistance please contact The Rainwater Technical Team on Tel 01536 383810

ALUMASC
RAINWATER®
GUTTERS AND DOWNPIPES

Technical Support
+44 (0)1536 383 810

technical@alumascwms.co.uk

AWMS
Station Road
Burton Latimer
Kettering
Northamptonshire
NN15 5JP

+44 (0)1536 383 810
info@alumascwms.co.uk

ALUMASC®
WATER MANAGEMENT SOLUTIONS

www.alumascwms.co.uk